ALLU Screener Crusher

INSTRUCTION MANUAL
D SERIES

Type _____

Serial number _____

www.allu.net

ALLU Finland Oy
Jokimäentie 1, 16320 Pennala, Finland
Tel:+358 (0)3 882 140, Fax:+358 (0)3 882 1440, E-mail:info@allu.net

ALLU One Step Ahead

Table of contents

1 GENERAL INFORMATION

Important information is found in this manual, labels affixed to the product, transport guidelines, and other country- or project-site-specific guidelines for the safe use of the product. The manuals constitute an integral and important part of the product and must always be made available to the user. This manual must always be stored in the cabin of the base machine in a location where it is readily accessible when necessary. Ensure that the manual remains clean and intact. When it is necessary, ask for assistance in interpreting the instructions.

	⚠ WARNING	
	COMPLIANCE WITH INSTRUCTIONS Read the manual before use or maintenance work, and always comply with the instructions provided. Incorrect handling of the machine creates a risk of death or serious injury.	

1.1 The purpose of the instructions

The instructions are intended to promote safety and the appropriate, correct, and cost-efficient use of the machine. This manual will help the user to identify, avoid, and prevent dangerous situations and their consequences.

Operations must comply with these instructions; obey all locally applicable laws, decrees, and regulations; and employ all locally dictated protective measures (such as practices for safe work methods).

Read this manual carefully, and follow the instructions meticulously. If something seems unclear, ask your employer or your nearest ALLU representative for clarification. Each part of this manual contains information that is important for your safety.

These instructions are also used in user training. Compliance with these instructions helps to keep maintenance costs and downtime to a minimum and the machine's reliability and durability optimal.

1.2 Identification

The Screener crusher's model and serial number can be found on the machine plate. Check that the model matches the model list in this manual. It is important to indicate the serial number in any discussion about the machine – for example, when ordering spare parts.

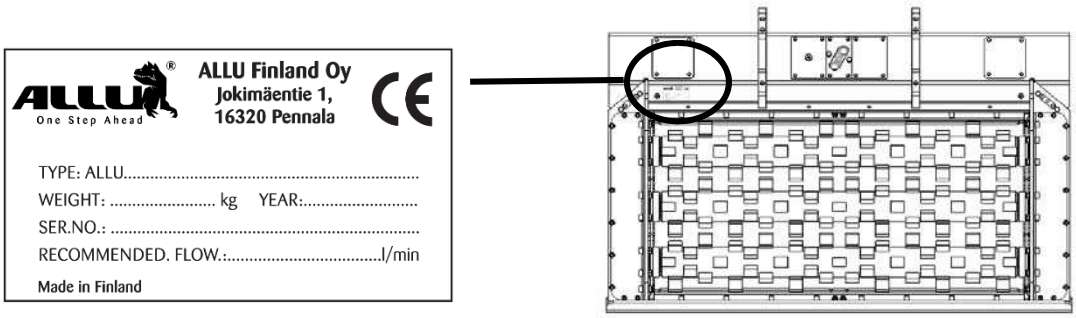

1.3 Manufacturer

This Screener crusher was manufactured by:

ALLU Finland Oy

Jokimäentie 1

16320 Pennala

FINLAND

Telephone:+358 3 882 140

+358 3 882 1440

Web: www.allu.net

E-mail: info@allu.net

1.4 CE marking and conformity declaration

The CE marking can be found on the machine plate. As it leaves the factory, this Screener crusher meets all the health and safety requirements set forth in the Machinery Directive. Store the EC-conformity declaration appropriately, and ensure that it is also passed on to any new owner of the machine.

1.5 The content of the EC-conformity declaration

EC-conformity declaration
(2006/42/EC, Appendix II A, Directive 2000/14/EC)
The manufacturer: ALLU Finland Oy

Of the address: Jokimäentie 1, 16320 Pennala, FINLAND

Declares that Screener crusher model AAA, serial number ZZZ
conforms with the terms of the Machinery Directive (2006/42/EC)
and conforms with the terms of the Noise Emission Directive (2000/14/EC).

This conformity declaration is valid if the machine has not undergone any changes not approved by the manufacturer in writing.

N.N., authorised to compile the technical specifications for this machine

N.N.,authorised to prepare this conformity declaration

Date: dd.mm.yy

Place: Jokimäentie 1, 16320 Pennala, FINLAND

1.6 The scope of the manual

This manual contains instructions for safety and on the use, transport, lubrication, and maintenance of this machine in the state it was in when released from the factory.

This manual and the safety instructions, in particular, along with the EC-conformity declaration, are valid only if changes not approved by the manufacturer have not been made to the machine.

A different machine model may have been used for some of the manual's illustrations, or some covers or similar parts may have been removed to allow for clearer depiction of the situation.

Because the product undergoes continuous improvement and development work, some changes might have been made to it that are not reflected in this manual.

If you have any questions on the product or this manual, please contact your local ALLU representative.

1.6.1 The screener crusher models covered by this manual

DN 2-09	DNS 2-09	DS 3-12	DSB 2-12	DH 3-12	DHB 2-12
DN 2-12	DNS 2-12	DS 3-17	DSB 2-17	DH 3-17	DHB 2-17
DN 2-17	DNS 2-17	DS 3-23	DSB 2-23	DH 3-23	DHB 2-23
DN 3-09	DNS 3-09	DS 4-12	DSB 3-12	DH 4-12	DHB 3-12
DN 3-12	DNS 3-12	DS 4-17	DSB 3-17	DH 4-17	DHB 3-17
DN 3-17	DNS 3-17	DS 4-23	DSB 3-23	DH 4-23	DHB 3-23
DN 3-12 TS		DSH 3-23 TS		DH 4-27	
DN 3-17 TS		DSH 4-23 TS		DH 3-12 TS	
				DH 3-17 TS	
				DH 4-17 TS	

1.7 Copying

2 SAFETY AND THE ENVIRONMENT

2.1 Safety notations

The following safety notations are used in this manual:

	⚠ DANGER
	The danger sign refers to an imminent dangerous situation that causes a risk of death or serious injury unless steps are taken to avert it.

	⚠ WARNING
	The warning sign refers to a potentially dangerous situation that causes a risk of death or serious injury unless steps are taken to avert it.

	⚠ CAUTION
	The caution sign refers to a potentially dangerous situation that causes a risk of slight or moderate injury or damage unless steps are taken to avert it.

	NOTE
	A note contains instructions or describes pertinent regulations.

2.1.1 Explanations for symbols

Warning signs:

						
General danger	Danger from flying objects	Danger related to working load	Danger of crushing	Danger of ignition	Danger related to high-pressure oil spray	Danger related to crushing of the hands or other body parts

DO NOT signs:

	
Do not remain in the danger zone	Do not put a hand or fingers between moving parts

DO signs:

			
Read and observe the instructions for use	Maintain a safe distance	Use safety goggles	Use a respirator

		
Wear a safety helmet	Use hearing protection	Wear protective clothing

2.1.2 Safety markings on the Screener crusher

The following warning markings must be displayed on the ALLU screener crusher. Any damaged or loose warning labels must be replaced.

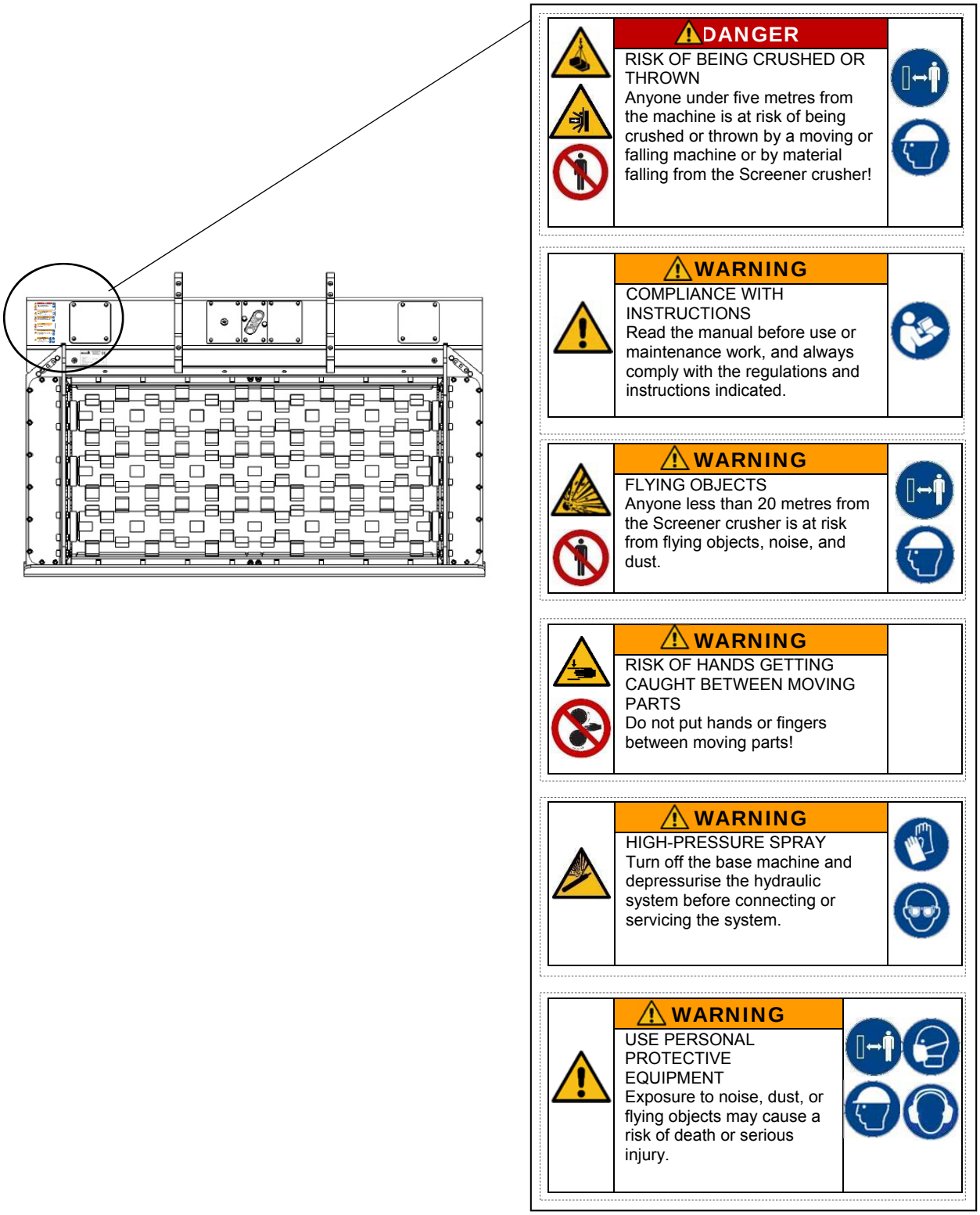

2.2 Danger zones and exposure to dangers during work

2.2.1 Danger zone I (5 m)

	**⚠DANGER** Stop working immediately if you observe another person in danger zone I. Material falling from the Screener crusher or a work machine falling creates a risk of death or serious injury within this zone. **Under no circumstances go under the Screener crusher!**	

	**⚠WARNING** Exposure to high-pressure oil spray within danger zone I causes a risk of death or serious injury.	

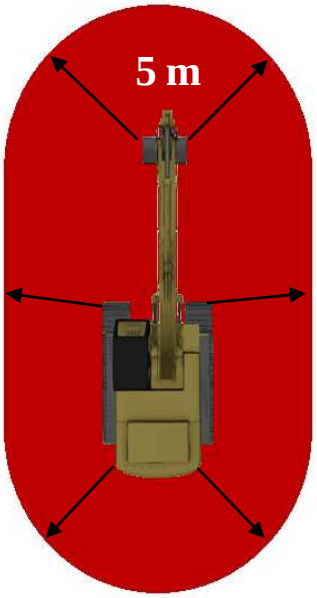

Danger zone I covers an area five metres in every direction from the Screener crusher and the base machine. No-one is allowed in danger zone I while the Screener crusher is in operation. Anyone within five metres of the machine is at risk from dangers related to material falling from the machine, high-pressure oil spray, and machines moving or falling over. The user must observe the surroundings continuously and stop working immediately if another person enters the area within five metres from the Screener crusher or base machine.

A protective structure must be installed for open-top base machines to protect the user from falling and flying objects.

2.2.2 Danger zone II (20 m)

 	**⚠ WARNING** Stop working immediately if you observe another person in danger zone II Exposure to material thrown by the Screener crusher in danger zone II causes a risk of death or serious injury.	 

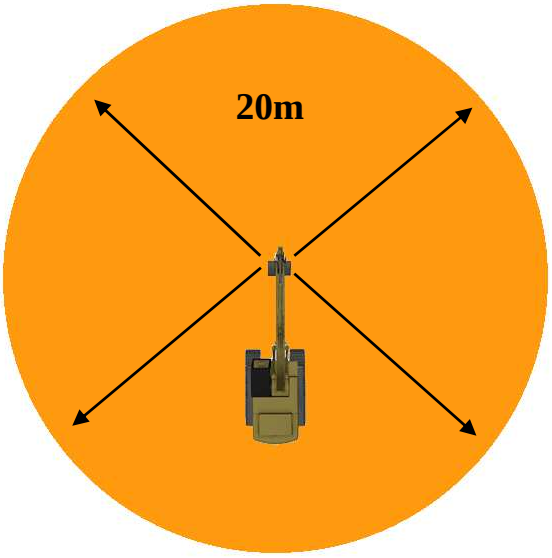

Danger zone II covers an area 20 metres in every direction from the Screener crusher. No-one is allowed in danger zone while the Screener crusher is in operation. Anyone within 20 metres of the Screener crusher is at risk from dangers related to material thrown by the machine, noise, and dust. The user must observe the surroundings continuously and stop working immediately if another person enters the area within 20 metres of the Screener crusher.

If, under exceptional circumstances, another person has to enter the danger zones, the user must be made aware of this, so that he or she can take extra care when operating the Screener crusher.

2.3 Exposure to dangers in connection with transport and maintenance

2.3.1 The Screener crusher tipping over or falling

	**⚠ DANGER** Comply with the instructions for lifting and transport, and use suitable and approved equipment when lifting the Screener crusher. No-one is allowed closer than five metres from a Screener crusher that is being lifted or transferred. A Screener crusher falling or toppling over causes a risk of death or serious injury!	

2.3.2 High-pressure spray

	**⚠ WARNING** Before any maintenance work performed in connection with use (see Section 4) and before connecting or disconnecting the hydraulic system (see Section 3), turn off the base machine and depressurise the hydraulic system by moving the control lever of the auxiliary hydraulic system with only the starter motor turned on. Exposure to high-pressure oil spray causes a risk of death or serious injury.	

Seek medical assistance immediately if any hydraulic oil enters your eyes or high-pressure spray penetrates your skin.

2.3.3 Unintentional start-up

	**⚠ WARNING** Detach the Screener crusher from the base machine and disconnect the hydraulic system before changing any wear parts or performing extensive maintenance work (see Section 4), to prevent unintentional start-up. Under no circumstances place your hands between rotating parts while the Screen crusher is attached to the base machine. Falling under a moving Screener crusher or getting caught between rotating parts causes a risk of death or serious injury!	

2.3.4 Environmental damage

	**⚠ CAUTION** Stop working immediately if you observe leakage of oil or another lubricant. Turn off the base machine and depressurise the hydraulic system by moving the control lever of the auxiliary hydraulic system with only the starter motor turned on.	

Minimise the environmental damage by using solid material such as sand or peat to absorb the leaking lubricant. Dispose of the contaminated sand or other material in an appropriate manner.

2.4 User responsibilities and general safety instructions

	**⚠ WARNING** The Screener crusher is to be installed, used, and serviced by only a person who has read and understood this manual and has the knowledge, skills, and experience required for safe and appropriate work methods. Always adhere to all general and specific safety regulations and take the measures applicable. Incorrect installation, inappropriate use, or incorrectly performed maintenance of the machine creates a risk of death or serious injury!	

	**⚠ WARNING** Use the protective personal equipment required by the working conditions and project-site specific regulations. Being exposed to noise, dust, or flying objects causes a risk of death or serious injury.	

The user must find out in advance any country- or project-site-specific safety regulations on the use of protective personal equipment, safety of the machines, and work methods when one is using a Screener crusher and must comply with said regulations. This owner's manual must be kept in the cabin of the base machine, so that the instructions are readily available.

The following are general regulations, prohibitions, and instructions to which the user must adhere:

- The Screener crusher must never be used by someone under the influence of alcohol or illegal substances.
- The Screener crusher must never be used for lifting or transporting people.
- The Screener crusher must never be serviced, inspected, repaired, or checked while the engine of the base machine is running.
- The Screener crusher is to be operated only from the cabin of the base machine.

- The user must learn about the features of the base machine, including depressurisation of the hydraulic system.
- The user must always use the personal protective equipment required by the operating environment, conditions, and regulations.
- The user must always stop working when another person enters the danger zones.
- The user must inform other persons on the project site when, for instance, the Screener crusher is being moved to a different location or is being transferred, to prevent people from unintentionally entering the danger zones.

2.5 Intended use and operating environment

2.5.1 Intended use

The Screener crusher is a hydraulic attachment to be used with hydraulic excavators, wheel loaders, and similar base machines for the screening, crushing, pulverising, mixing, and feeding of a variety of materials.

The Screener crusher is not designed for digging of soil, crushing of hard stones, or transferring of large and heavy objects.

2.5.2 Operation range

	⚠ DANGER
	Do not use the Screener crusher in an environment with an ignition or combustion risk! A fire or explosion resulting from a spark causes a risk of death or serious injury!

- The Screener crusher is to be operated only outdoors and in indoor spaces suitable for work with such machines.
- The Screener crusher's intended operating temperature range is -25 °C to 60 °C.

- Use of the Screener crusher underwater is forbidden without project-site specific risk assessment and safety measures, because of the risk of an oil leak.
- In work with hazardous or toxic materials, the appropriate safety measures and personal protective equipment must be in use.

2.5.3 Unanticipated and incorrect use

The Screener crusher is intended for the processing of various materials, as described in this manual. 'Unanticipated and incorrect use' refers to all use that is not in line with this manual. **Unanticipated or incorrect use may create a risk of casualties or damage to the Screener crusher, the base machine, or the environment.**

2.5.4 Repairs and changes

ALLU Screener crushers are to be repaired and equipped with only genuine ALLU spare parts and accessories. It is forbidden to make any changes to the Screener crusher without written permission from the manufacturer.

3 ENTRY INTO SERVICE AND USE

3.1 Transport, lifting, and storage

3.1.1 Transport

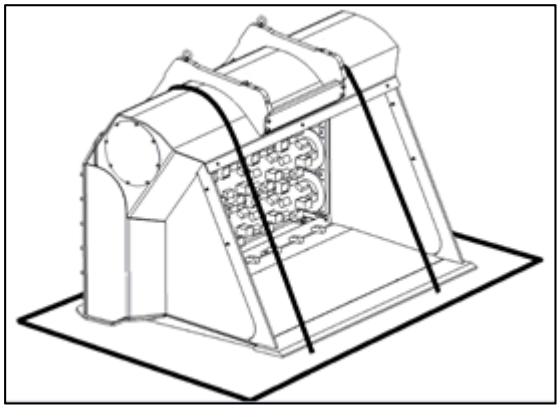

When transporting a Screener crusher, secure it separately to the transport equipment, with its bottom facing downward.

3.1.2 Lifting and transfer

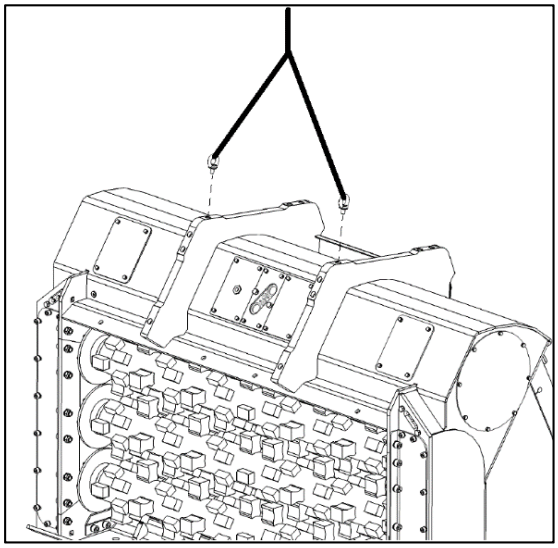

For lifting and transfer, connect hoist belts or chains to the hoist rings fixed to the threaded holes further back in the adapter. If an adapter has been installed for the Screener crusher, secure the hoist belts or chains around parts from which they cannot come loose.

The weight of the Screener crusher (without accessories and an adapter) is stated on the machine plate and in the table of technical data in this manual.

When using a forklift, always lift the Screener crusher from the side of the drums.

Never lift the Screener crusher from the side of the lip shroud. Hoisting the Screener crusher from the lip shroud side may cause it to topple over, because its centre of gravity is high and toward the back.

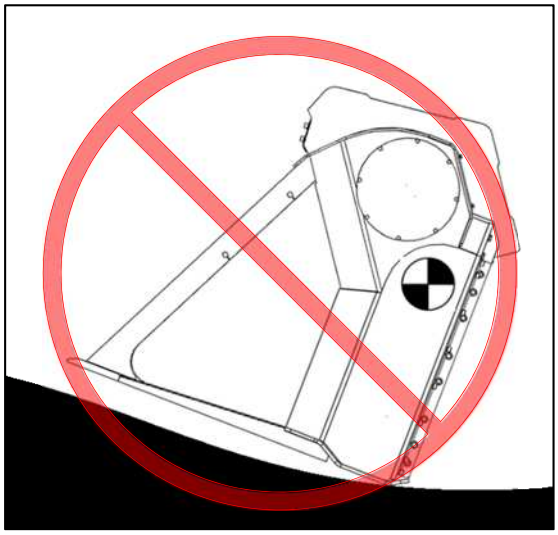

Never disconnect the Screener crusher from the base machine or a hoisting device on a sloping or soft surface, to prevent it from falling over. Note the risk of falling when loosening the straps used to secure the Screener crusher for transport.

3.1.3 Long-term storage

Store the Screener crusher protected from the weather.

Before long-term storage:

- Wash and lubricate the Screener crusher.
- Remove any rust and paint the affected surfaces.
- Protect the bare metal surfaces with an anti-corrosive agent.
- Plug any open hydraulic connections.

3.2 Attachment to the base machine

3.2.1 Mechanical attachment and adapters

The Screener crusher is mounted on the base machine with an adapter.
The Screener crusher is mounted on the base machine with an adapter that has lugs specific to the base machine's accessory mount welded to it.

The adapter's mounting bolts:

Screener crusher model	Bolt size	Tightening torque
DN, DNS, DS, DSB	M20 (10.9)	540 Nm (oiled threading)
DH, DHB	M24 (10.9)	960 Nm (oiled threading)

	**⚠ WARNING** Always mount the adapter carefully, complying with the instructions in order to ensure the required strength. Attach all the bolts, and always use stretch sleeves, suitable bolts, and the correct tightening torque. A Screener crusher coming loose and falling causes a risk of death or serious injury!	

3.2.1.1 Installation of the excavator adapter

The Screener crusher may be mounted in either the backhoe or the face shovel position. The mounting arrangement selected determines which way the adapter has to be mounted on the Screener crusher.

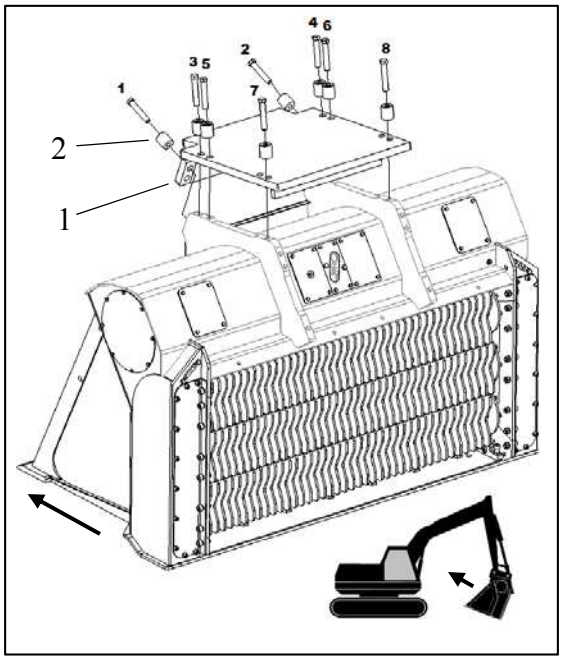

When the Screener crusher is mounted in the backhoe position (‘the standard position’), the basic plate’s shield [2] is placed on the front of the Screener crusher. Tighten the bolts in the order presented in the picture, first to half the tightening torque specified in the table, then to the full tightening torque on the second round. Use stretch sleeves [1] under each mounting pin.

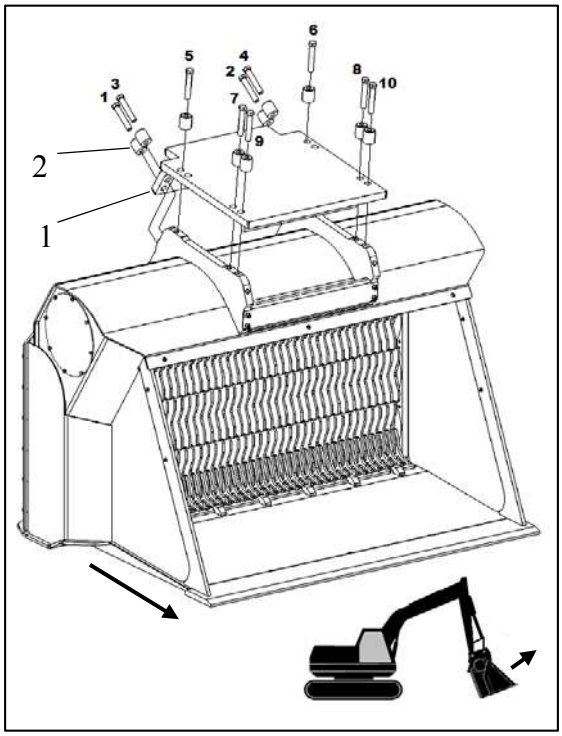

When the Screener crusher is mounted in the face shovel position, the basic plate’s shield [2] is placed at the back of the Screener crusher. Tighten the bolts in the order presented in the picture, first to half the tightening torque specified in the table, then to the full tightening torque on the second round. Use stretch sleeves [1] under each mounting pin.

3.2.1.2 Installation of the wheel loader adapter

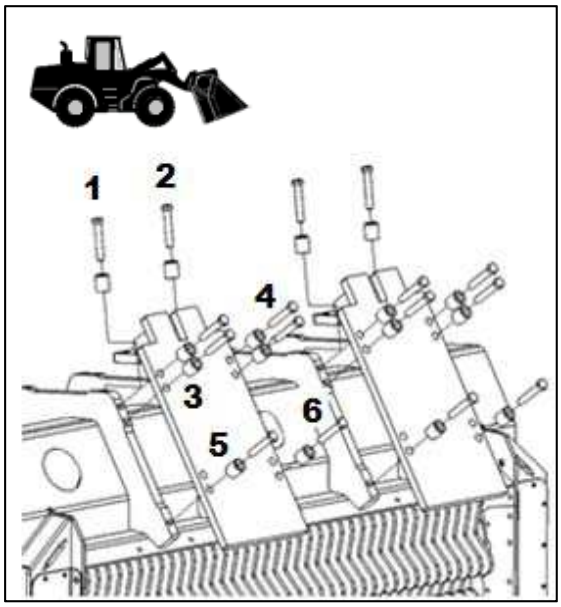

Two-part wheel loader basic plate: Tighten the bolts in the order shown in the picture, first to half
the tightening torque specified in the table, then to the full tightening torque on the second round.

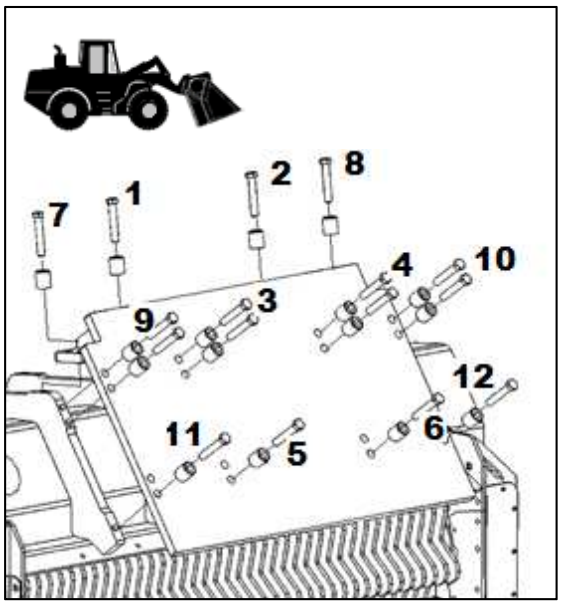

One-part wheel loader basic plate: Tighten the bolts in the order shown in the picture, first to half
the tightening torque specified in the table, then to the full tightening torque on the second round.

3.2.2 Diagrams of adapters

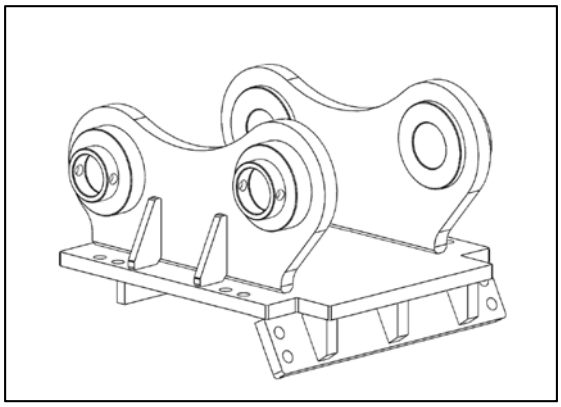

Excavator adapter, direct pin mounting.

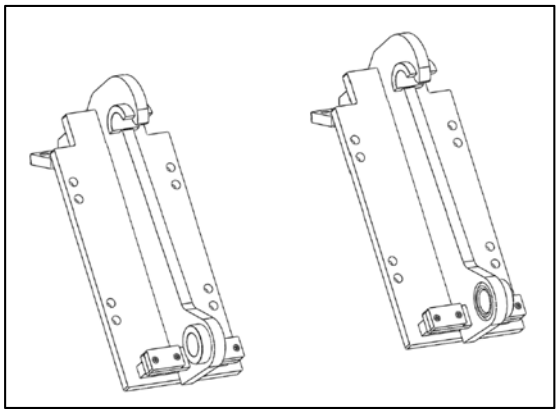

Wheel loader adapter, quick connection (similar to Volvo).

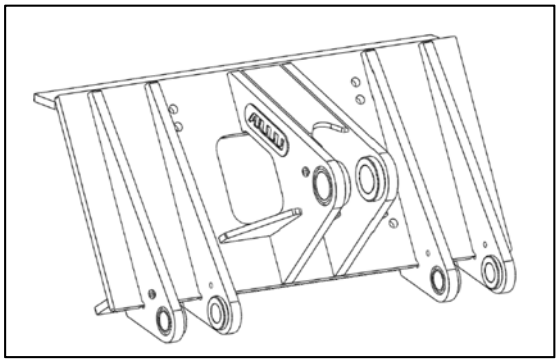

Wheel loader adapter, Z link connection.

3.2.3 Attachment to the base machine

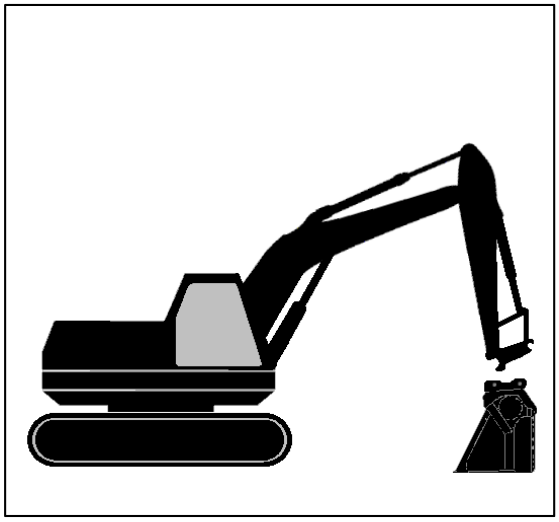

Always attach and detach a Screener crusher on a solid, even surface in such a way that the Screener crusher's bottom plate is toward the ground.

Never place the Screener crusher upside down on the ground.

3.2.4 Connection of the hydraulic system and requirements for the system

3.2.4.1 Hydraulic oil requirements for the base machine

A high-quality, mineral-based hydraulic oil with additives that has been approved by the base machine's manufacturer must be used with the Screener crusher. The viscosity class of the hydraulic oil must be selected such that, at normal operating temperature, the oil's viscosity is as close to the recommended value as possible. If the viscosity differs from the recommended values, the service life of the motor becomes shorter.

ISO VG viscosity classification in accordance with operating temperature:

Maximum operating temperature for	ISO VG classification for hydraulic
40–50 °C	46
50–60 °C	68
60–80 °C	100

Values for hydraulic oil:

Recommended operating temperature for	30–60 °C
Recommended oil viscosity at operating	35 cSt
Allowed viscosity	20–75 cSt

If the hydraulic oil continuously remains at a high temperature, its service life becomes shorter. Change the hydraulic oil at the intervals specified in the base machine's service programme.

3.2.4.2 The filtering and cooling of hydraulic oil

The maximum rate of hydraulic oil contamination allowed in accordance with ISO 4406 is 20/16. The highest recommended nominal filtering rate is 25 µm.

In demanding applications, the Screener crusher may produce a large quantity of heat, which is mainly transferred to the base machine's hydraulic system. Therefore, it is recommended that the base machine have a cooling system for hydraulic oil.

3.2.4.3 Hydraulic settings for the base machine

The Screener crusher requires two-way hydraulics to allow the drums to rotate in both directions. Set the hydraulic flow in accordance with the range specified on the machine plate (and in the technical data).

It is not necessary to limit the maximum pressure in the device circuit of the base machine. All D-series Screener crushers come with a power control valve to protect the Screener crusher against hydraulic overload. The power control valve begins to control the engine's pressure difference when this value exceeds 280 bar and the hydraulic flow when it exceeds the model-specific maximum value.

In excavators, the recommended range for the maximum pressure setting for the device circuit is 300–340 bar. For wheel loaders, it is recommended that the highest pressure setting available be selected as the maximum pressure setting for the device circuit.

The base machine's valves and pipes create back pressure in the operating hose acting as the return line, which typically ranges from around 10 to 30 bar, depending on the base machine. High back pressure causes, among other things, a power reduction and heating of the hydraulic oil.

	NOTE Set the base machine's hydraulic flow to be as low as possible without affecting the capacity. An unnecessarily high rotation speed increases fuel consumption, causes heating of the hydraulic oil, and speeds up the wearing of the engine and wear parts.

3.2.4.4 Drain line

In addition to two-way hydraulics, a low-pressure drain line is needed in the base machine to carry the oil accumulating in the hydraulic motor case back to the base machine's hydraulic tank.

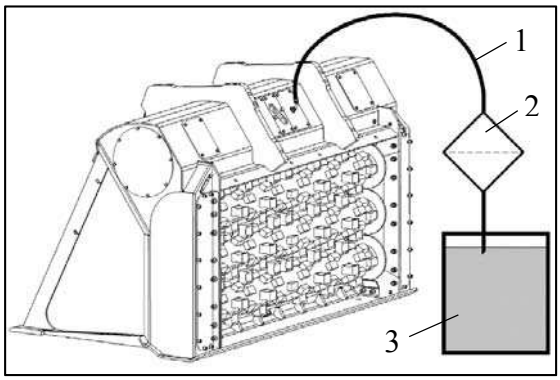

Oil accumulated in the Screener crusher is carried to the base machine's hydraulic tank [3] via a drain line [1]. The drained oil can either be filtered via a separate filter [2] or directed to the return filter of the base machine (see the diagram in section 5.3.3).

	NOTE Drained oil must not be directed through valves, taps, or similar; it must pass directly via the filter to the hydraulic tank, to prevent an increase in back pressure or the unintentional closing of the drain line. The back pressure in the drain line must not exceed 30 bar. Excessive pressure in the drain line damages the hydraulic motor.

A safety valve is available as an accessory for the Screener crusher to protect the hydraulic motor from high back pressure in the drain line.

If a drain line cannot be used, an elimination system for the drain line can be obtained for the Screener crusher as an accessory. A separate drain line should, however, be used whenever possible.

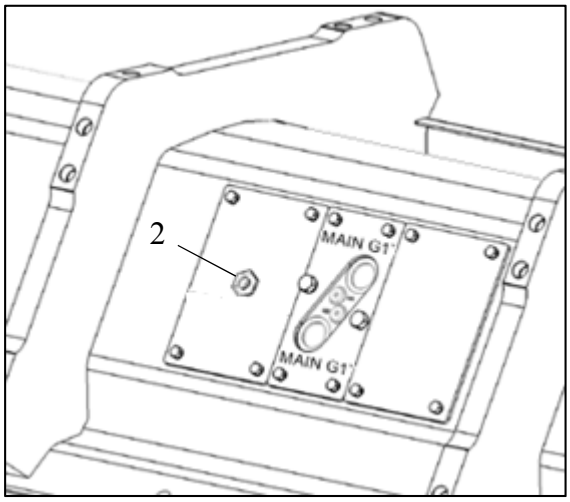

If an elimination system for the drain line, available as an accessory, has been installed for the Screener crusher, the restricting valve for the pressure in the motor case is connected to the port [2]. If the back pressure in the base machine's return line exceeds 30 bar, the pressure restricting valve opens and oil flows out via the sieve that protects the port [2].

3.2.4.5 Hoses and connections

Connections:

Screener crusher model	Operating ports	Drain port	Pressure port
All models	G1" female thread	G3/8" female thread	G1/4" female thread

Recommended minimum hose sizes:

Screener crusher model	Operating hoses	Drain line
DN models	3/4" (min. nominal pressure 350 bar)	3/8"
DNS and DN TS models	1" (min. nominal pressure 350 bar)	3/8"
DS, DH, DSB, and DHB models	1" (min. nominal pressure 350 bar)	3/8"

⚠ WARNING

Before connecting or disconnecting the hydraulic system, turn off the base machine and depressurise the hydraulic system by moving the control lever of the auxiliary hydraulic system with only the starter motor turned on.

Exposure to high-pressure oil spray from a pressurised connection causes a risk of death or serious injury.

⚠ CAUTION

Minimise the risk of hydraulic oil entering the environment by having basins and material for absorbing any leaks available while making connections!

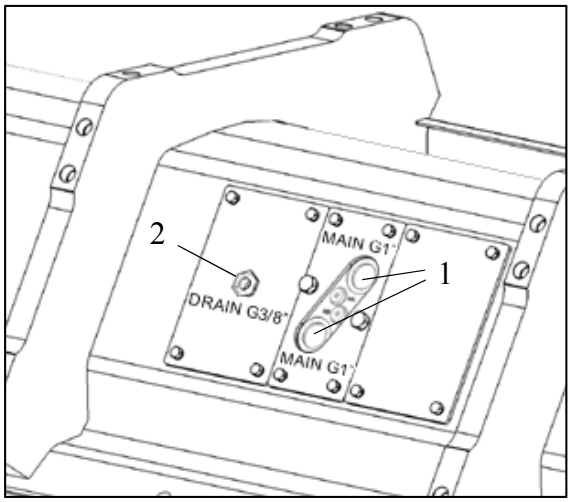

1. Connect the operating hoses and drain line by using suitable connectors. Operating connections [1] and drain connection [2]. **Never climb on the Screener crusher to make connections.**
2. Route the hoses to the base machine in such a way that they do not press against sharp edges. When necessary, use 45° or 90° hose fittings.
3. After completing the connections, run the Screener crusher through its entire range of positions to ensure that the hoses do not stretch or become crushed in any of the positions.

NOTE

When using quick-release connectors, take extra care, particularly when connecting the drain line, to prevent a rise in pressure or rupturing of the drain line.

3.2.4.6 Disconnection of the hydraulic system

⚠ WARNING

Before connecting or disconnecting the hydraulic system, turn off the base machine and depressurise the hydraulic system by moving the control lever of the auxiliary hydraulic system with only the starter motor turned on.

Exposure to high-pressure oil spray from a pressurised connection causes a risk of death or serious injury.

	⚠ CAUTION
	Minimise the risk of hydraulic oil entering the environment by having basins and material for absorbing any leaks available while making connections!

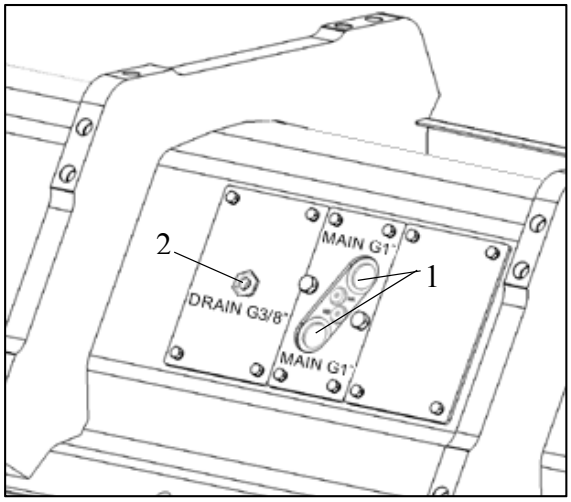

Detach the hoses, and plug any open connections [1] [2] in the Screener crusher. If the hoses are left attached to the Screener crusher, plug and cover the hose ends. **Never climb on the Screener crusher to undo connections.**

	NOTE
	Prevent any dirt form entering the hydraulic oil, by keeping the connections clean and covered and by preventing open connections from coming into contact with the ground. Dirt is harmful to all components of the hydraulic system and shortens their service life.

3.3 New users and procedures before use

3.3.1 Inspection upon receipt

When you receive a new Screener crusher, make sure it is accompanied by the following documents:

- Instruction manual
- Spare-parts list
- Warranty registration form and warranty terms

Fill in the warranty registration form and send it to your ALLU representative.

3.4 Use and operation

3.4.1 The principle of operation of the Screener crusher

The Screener crusher is a hydraulic attachment to be used with hydraulic excavators, wheel loaders, and similar base machines for the screening, crushing, pulverising, mixing, and feeding of a variety of materials. The Screener crusher can process a wide range of materials, including topsoil, excavated soil, sand, gravel, blacktop and dirt, clay, peat, coal, bark, compost, organic waste, construction waste, milled asphalt, and glass.

The processing takes place in the Screener crusher with the assistance of drums rotating in the same direction, powered by one or more hydraulic motors. The rotation direction and speed of the drums are adjusted with controls on the base machine. In the processing of materials, the fine matter passes through the drums on account of their movement and falls into a pile under the Screener crusher. Large and uncrushed pieces remain in the bucket, from which they can be tipped onto another pile. The processing characteristics, such as the strength of the crushing and the fragment size produced, can be influenced by the choice of drums and blades.

3.4.2 The first start-up and commissioning

	⚠ WARNING	
	Before inspecting connections, turn off the base machine and depressurise the hydraulic system by moving the control lever of the auxiliary hydraulic system with only the starter motor turned on. Exposure to high-pressure oil spray from a pressurised connection causes a risk of death or serious injury.	

Perform the following steps before use:

- Tip the Screener crusher into various positions, to ensure that it cannot hit the boom of the base machine and that the hydraulic hoses are not going to get stretched or crimped.

- Tip the Screener crusher such that the drums can be seen from the cabin of the base machine. Rotate the drums for approximately two minutes at low speed in both directions, to remove any air from the hydraulic system. Keep an eye out for any leaks.
- Check the hydraulic hoses and connections for leaks and damage.
- Visually check that the adapter mounting bolts are not loose.

3.4.3 Correct use

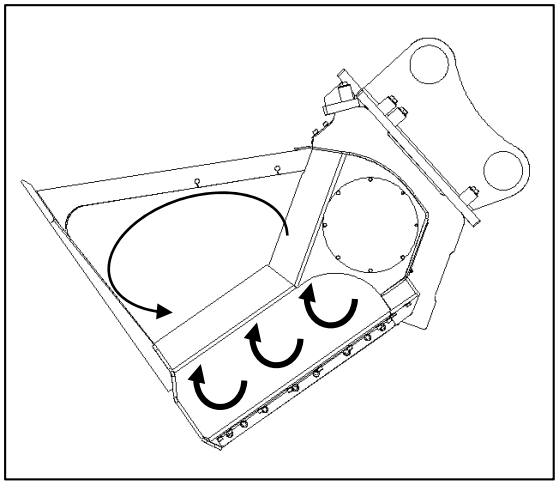

The rotation direction of the drums (bottom upward) is designed to roll the material inside the Screener crusher, which helps to separate finer material. If the material does not pass through properly or the Screener crusher becomes blocked, tilt the bucket or use the other rotation direction for a short while.

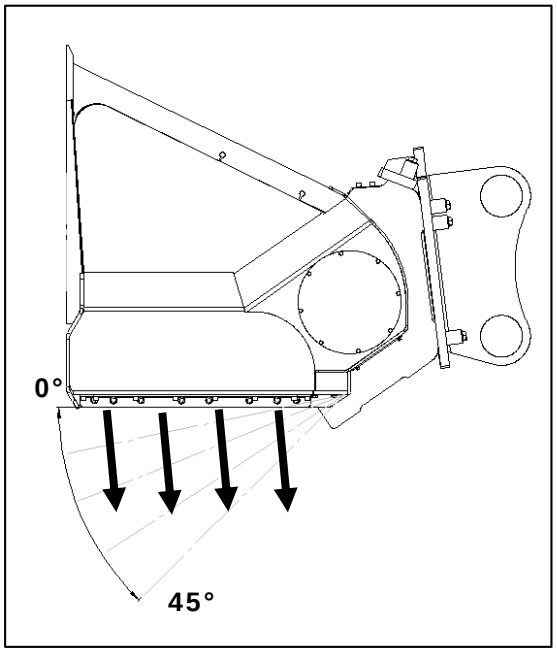

The intended operating angle ranges from 0° to 45° from horizontal level in relation to the back wall.

Check that the position range of the base machine's booms allows the Screener crusher to be tilted within the operating range presented in the picture (in some cases, tilting to the 0° position is not possible).

The best operation angle depends on the material being processed. Various angles should be tested when work is commenced.

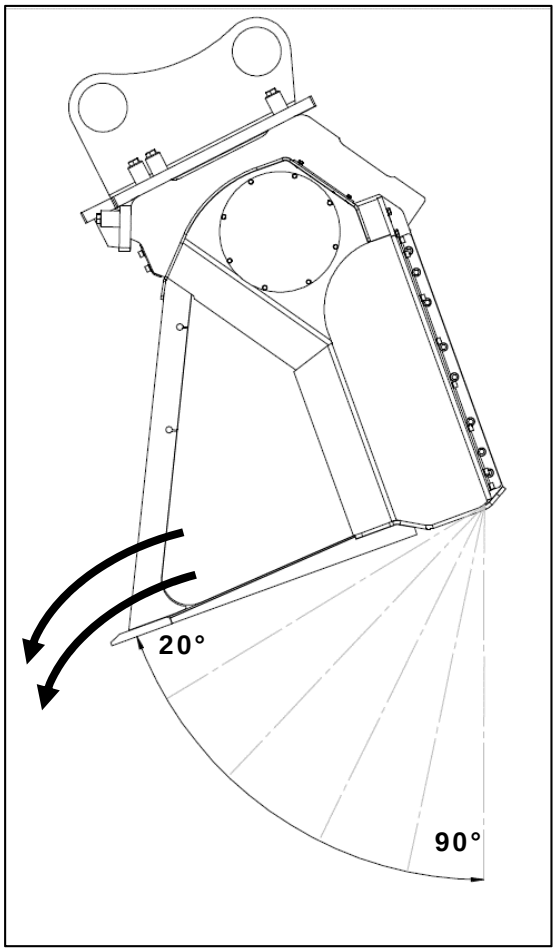

The intended emptying angle is 20° to 90° from horizontal level in relation to the bottom plate.

Check that the position range of the base machine's booms allows the Screener crusher to be tilted within the emptying range presented in the picture.

Other operation tips:

- Change any wear parts in good time. Worn blades reduce capacity and affect the fragment size.
- Clean the Screener crusher regularly when working with materials that are likely to stick. Such materials adhere to the interior surfaces of the Screener crusher, drums, and counter blades, reducing its capacity and creating additional strain.
- The drums should be stopped before the bucket is completely empty, to keep stones from being thrown and to improve the overall capacity (material usually passes through more slowly when the Screener crusher is nearly empty).

3.4.4 Forbidden work methods:

Never move material by pushing it with the Screener crusher's drums, as this could damage the sealing of the bearings.

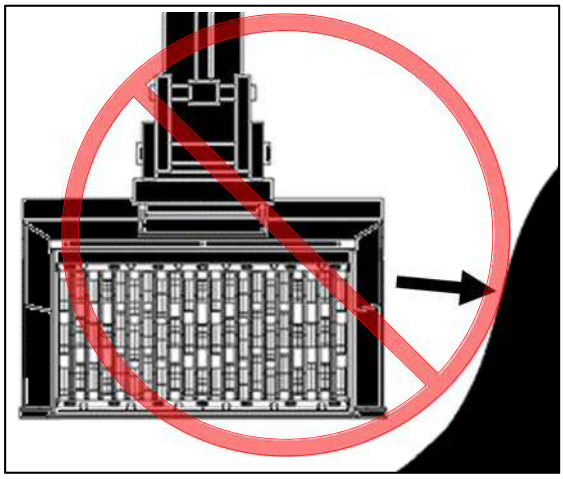

Never use the sides of the Screener crusher to move material: that could damage the Screener crusher.

Never use the Screener crusher as a support when moving the base machine, as this may damage the Screener crusher.

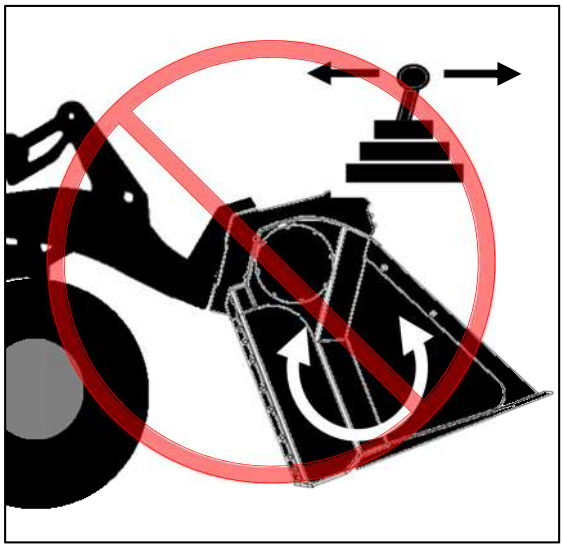

Do not continuously change the Screener crusher rotation direction: doing so could cause the power transmission to wear out more rapidly. Bring the drums to a standstill cautiously before changing the rotation direction.

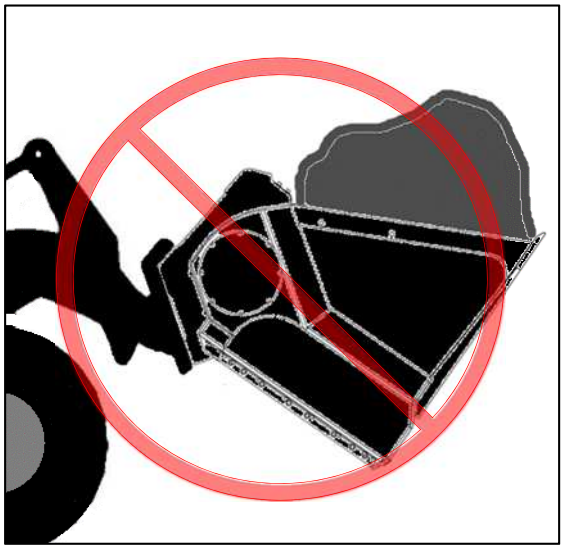

Do not overfill the Screener crusher, as that may cause a loss of stability in the base machine and block the Screener crusher.

Be sure to keep large stones from entering the bucket, to avoid excessive wear.

4 MAINTENANCE

The Screener crusher's maintenance programme consists of daily and weekly inspections and weekly and annual servicing. As part of the inspection procedures, the condition of the structures, wear parts, and power transmission is checked and any stones and similar fragments caught in the Screener crusher are removed. As part of servicing, the power transmission's lubrication is changed or lubricants topped up, and its components are checked (and replaced as necessary).

The schedule for the replacement of any wear parts is not specified in the Screener crusher's maintenance programme, because the wear to these components depends on operating conditions and the material processed. The Screener crusher components that are most likely to experience wear are the blades and counter blades. The wearing of these components is checked in connection with each inspection, and the parts are replaced before they get worn to such an extent that continuing to work will create wear to holding structures or the Screener crusher's other structural components.

Maintenance item	**Section of the instruction manual**	**Schedule**
Daily inspection/cleaning	4.1.1	Daily / every 8 hrs
Weekly inspection and lubrication of bearings	4.1.2	Weekly / every 40 hrs
Extensive maintenance	4.2	Annually / every 500 hrs
Replacement of wear parts	4.3	When necessary

4.1 Maintenance work in connection with use

	**⚠ WARNING** Before inspections and maintenance work performed in connection with use, turn off the base machine and depressurise the hydraulic system by moving the control lever of the auxiliary hydraulic system with only the starter motor turned on. Under no circumstances place your hands between rotating parts while the Screen crusher is attached to the base machine. Exposure to high-pressure oil spray or getting caught between rotating parts causes a risk of death or serious injury.	

If any damage or faults are observed in the inspected machine components, these must be rectified before work begins.

4.1.1 Daily inspection (8 hrs)

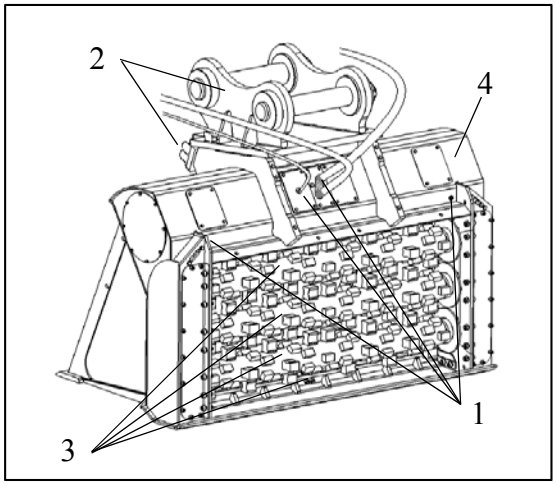

1. Remove any stones or other objects caught between the blades.
2. Check that the operating hoses are not damaged and that the connections do not leak [1].
3. Visually inspect the mounting of the adapter[2] on the base machine and Screener crusher.
4. Check the condition and mounting of wear parts [3].
5. Check the condition of the warning labels [4].
6. Check that there is no damage to the frame (including cracks or deformation).
7. Check that all covers are closed and that the screws are firmly in place.

4.1.2 Weekly inspection (40 hrs)

In addition to those of the eight-hour inspection, the following checks are performed:

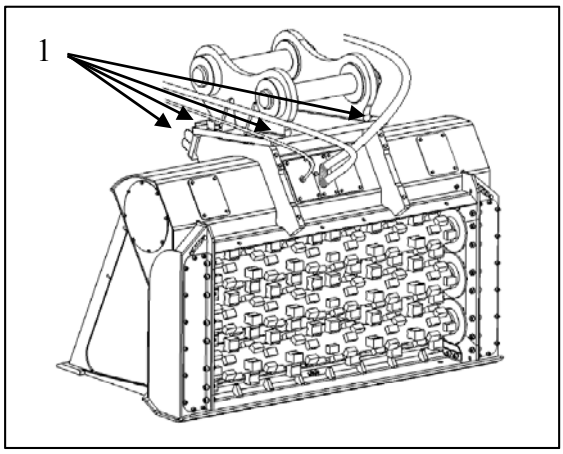

1. Use a spanner to ensure that all the adapter bolts [1] have been tightened properly.

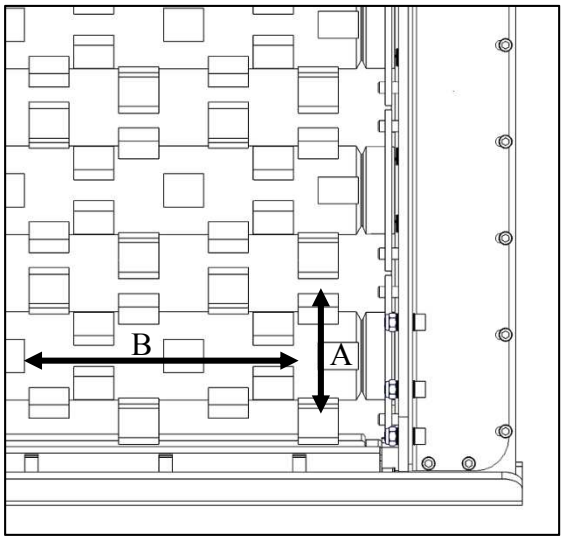

2. Check the axial and radial clearance in the drum bearings by pushing the drums up and down [A] (max. total clearance: 1 mm) and side to side [B] (max. total clearance: 2 mm) with a crowbar.

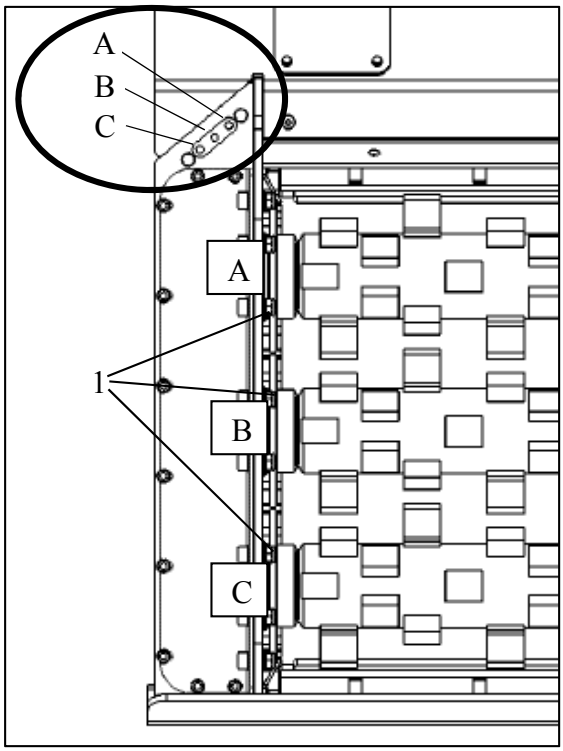

3. Lubricate the drum bearings at both ends (the picture shows only the left side). Apply lubricant to each grease fitting until some lubricant comes out between the dust cover seals [1] on the side of the drums.

Recommended bearing lubricants:

Operating temperature	NLGI grade
Below 0 °C	0
0–25 °C	1
Over 25 °C	2

Use lithium-complex-based lubricants for bearings. The ALLU first-installation lubricant is Rocol Sapphire 1.

4.2 Extensive maintenance

	**⚠ WARNING** Detach the Screener crusher from the base machine and disconnect the hydraulic system before changing any wear parts, to prevent unintentional start-up. Under no circumstances place your hands between rotating parts while the Screen crusher is attached to the base machine. Falling under a moving Screener crusher or getting caught between rotating parts causes a risk of death or serious injury!	

Assess the condition of the drums and power transmission as a single entity; often, it may be beneficial to replace the drums and the power transmission at the same time, using a ready drum assembly complete with bearings and chain wheels (see the spare-parts list).

The removal and mounting of the drums and power transmission and the maintenance of the bearing units are presented in sections 4.3.7–4.3.9.

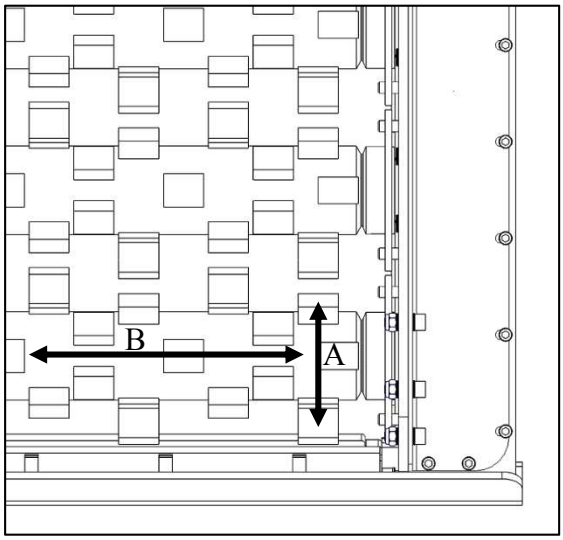

1. Replace/service bearings if the total radial clearance [A] exceeds 1 mm or the total axial clearance [B] exceeds 2 mm (see section 4.1.2).
2. Check the condition of the bearing grease tubes and connectors. Repair any broken tubes/hoses and joints.

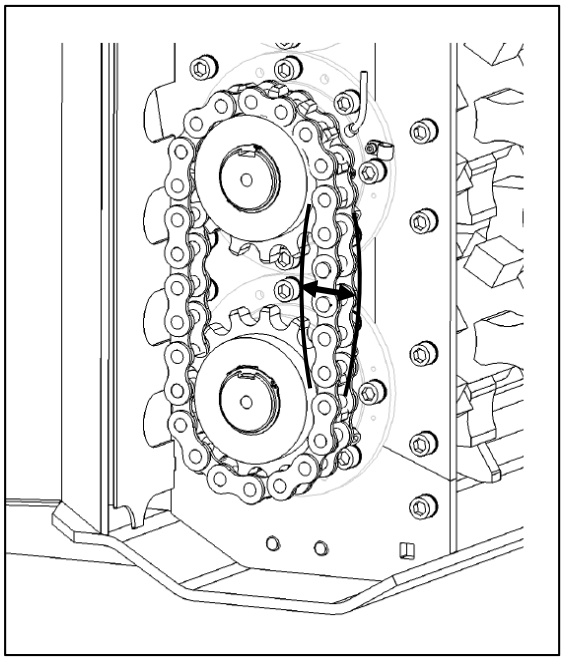

3. Replace the chains and chain wheels if they have stretched more than 60 mm, as shown in the picture. Always replace the chains and chain wheels at the same time.

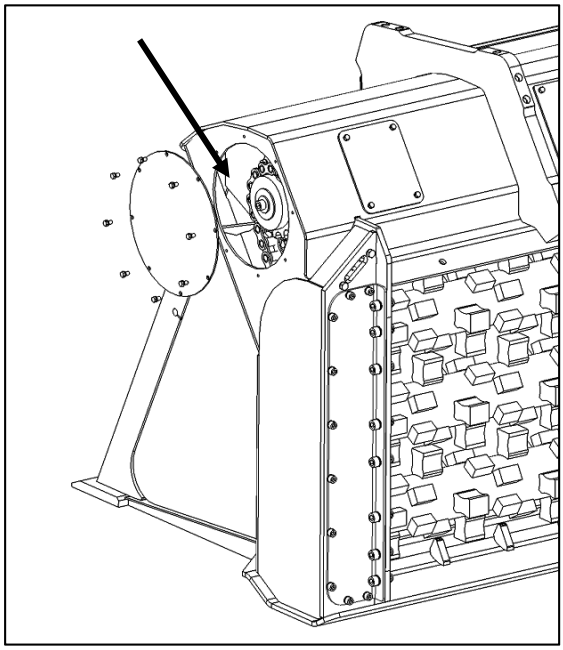

4. Change the power transmission system lubricant. Remove the old lubricant and any dirt from the chain housings before adding the new lubricant. It is easiest to apply the new lubricant through the round maintenance plate in the chain housing while the back plate is closed. The covers should be sealed in place with a silicone adhesive. Clean the surfaces before applying silicone.

   The ALLU first-installation lubricant for the power transmission is Teboil Universal CLS (NLGI grade 00 centralised system lubricant).

Load amounts for the lubricant:

Model	Load amount / 1 chain housing
DN/DNS	4 kg
DS/DH/DSB/DHB	5 kg

4.3 Replacement of wear parts

	**⚠ WARNING** Detach the Screener crusher from the base machine and disconnect the hydraulic system before changing any wear parts, to prevent unintentional start-up. Under no circumstances place your hands between rotating parts while the Screen crusher is attached to the base machine. Falling under a moving Screener crusher or getting caught between rotating parts causes a risk of death or serious injury!	

	**NOTE** Replace the blades regularly to prevent the material processed from causing wear to the drums' blade-holders. At the latest, the blades should be replaced when their surface is ~ 10 mm from the blade-holders' top surface.

4.3.1 Replacement of blades (DN, DS, and DH models with XHD drums)

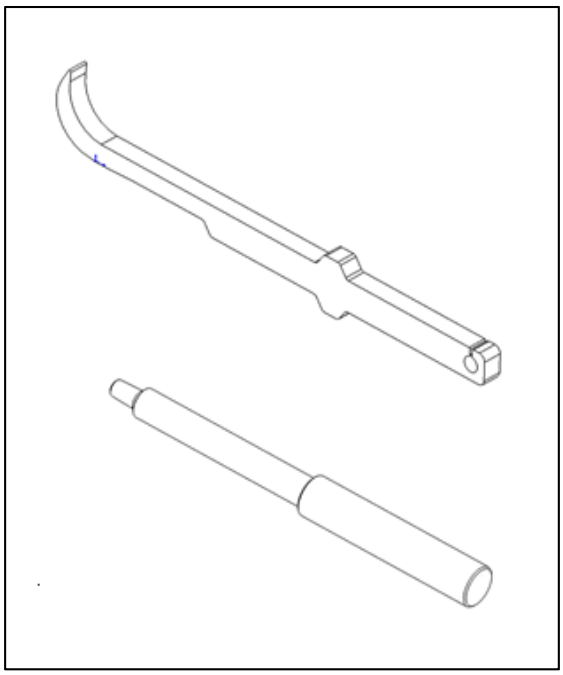

Special tools required: - An extractor tool for the blades and a cotter press delivered with the Screener crusher. - A cotter press compatible with an impact drill is available as an accessory (SDS Max head).

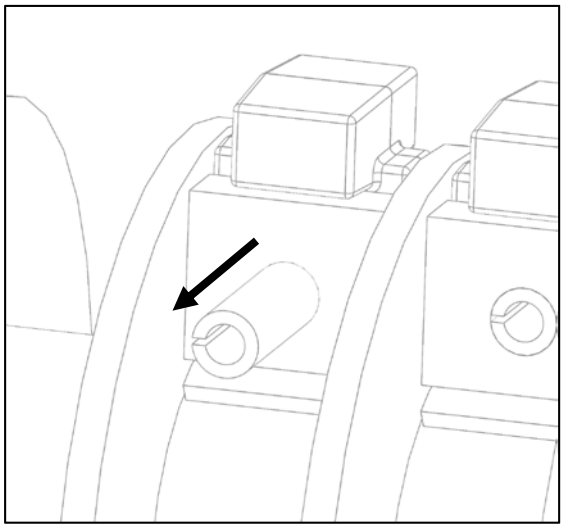

Push the cotter pin forward with the cotter press until the blade can be removed.There is no need to detach the cotter pin completely from the blade-holder unless it is replaced at the same time as the blade.

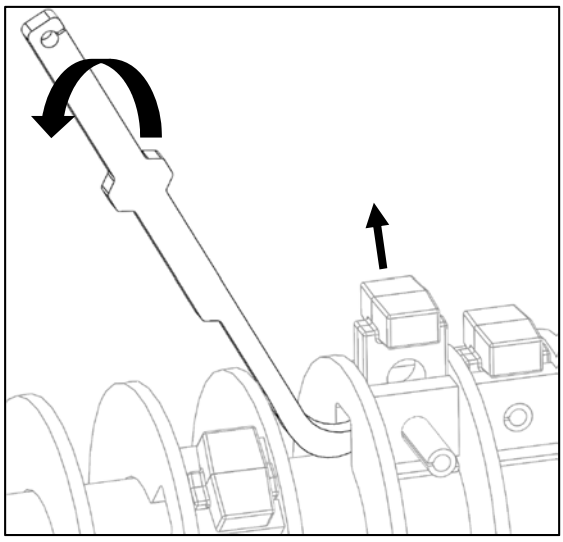

Remove the blade. The blade is removed by pushing it upward through a slot in the side plate.

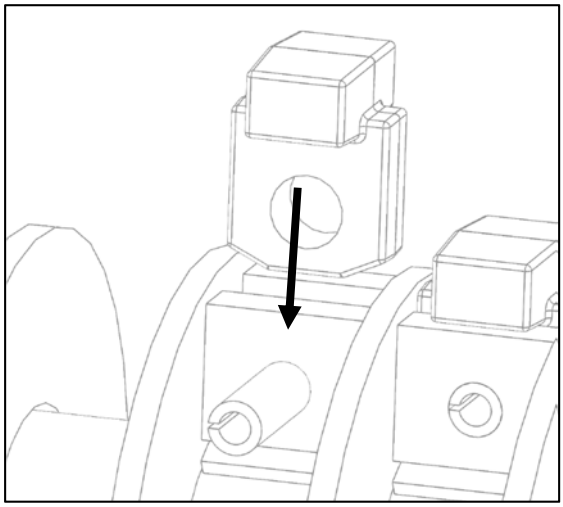

Push a new blade into its place.

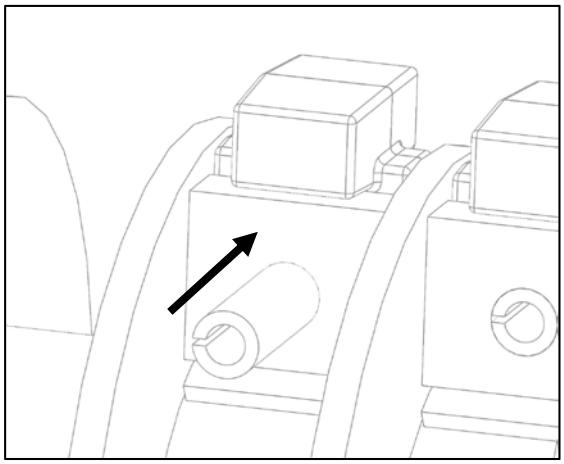

Hit the cotter pin back into its place with the cotter press. Check that the cotter pin is centred on the blade-holder.

	NOTE Replace the counter blades regularly, to prevent the material processed from causing wear to the frame's counter blade-holders. At the latest, the counter blades should be replaced when their surface is at the same level as the upper surface of the counter-blade-holders.

4.3.2 Replacement of counter blades (DN, DS, and DH models with XHD and X drums)

Number	Item	Quantity	Note
1	Hexagonal screw M16 × 70, 10.9	2	200 Nm
2	Base plate M16	4	
3	Locking nut M16	2	
4	Counter blade	2	
5	Counter blade lock plate	1	

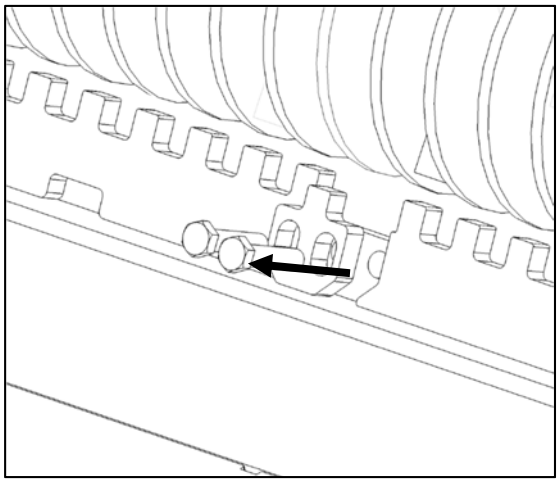

1. Loosen the mounting bolts of the counter blade's lock plate, and remove the lock plate.

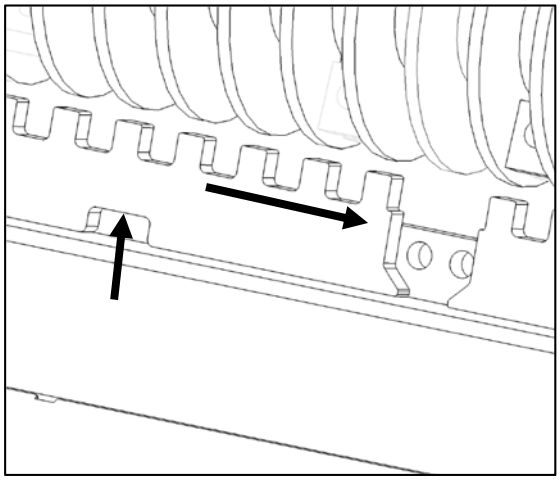

2. Slide the counter blade toward the gap left by the lock plate while pushing it off the frame by means of the slots in the counter blade.

3. Remove the counter blades.

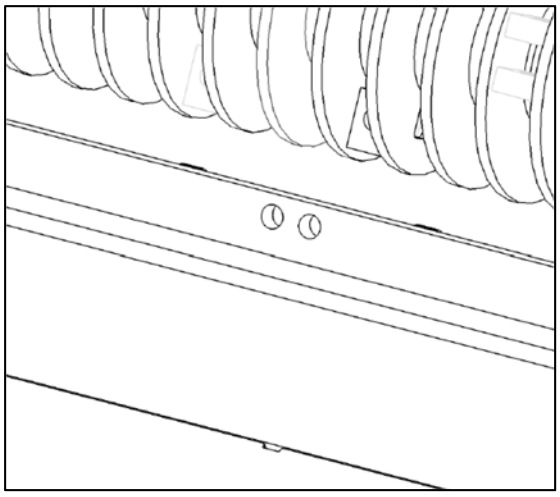

4. Check the condition of the counter-blade-holders, repairing them as necessary.

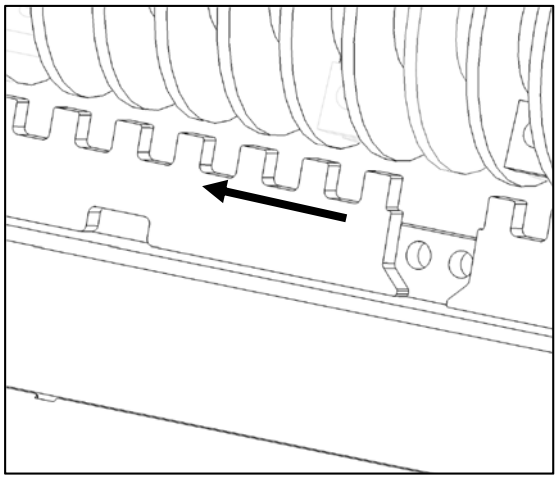

5. Place the counter blades against the counter-blade-holder, and push into place. The counter blade ends have locking teeth that come to rest under the contact surfaces.

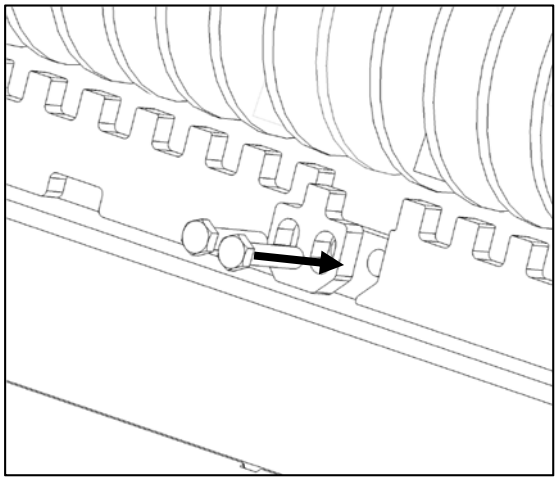

6. Place the counter blades' lock plate into its correct place, and fix in place with bolts and nuts.

4.3.3 Replacement of fine screening blades (DNS, DSB, and DHB models)

Number	Item	Quantity	Note
1	Hexagonal screw M16 ×50, 10.9	4	200 Nm
2	Lock plate NL16	4	
3	Hexagonal screw M16 × 60, 10.9	2	
4	Hexagonal nut M16, low version	2	
5	Counter blade lock plate, left-handed	1	
6	Counter blade lock plate, right-handed	1	
7	Counter blade	1	

Removal and installation of the top counter blade is performed as described below for the bottom counter blade.

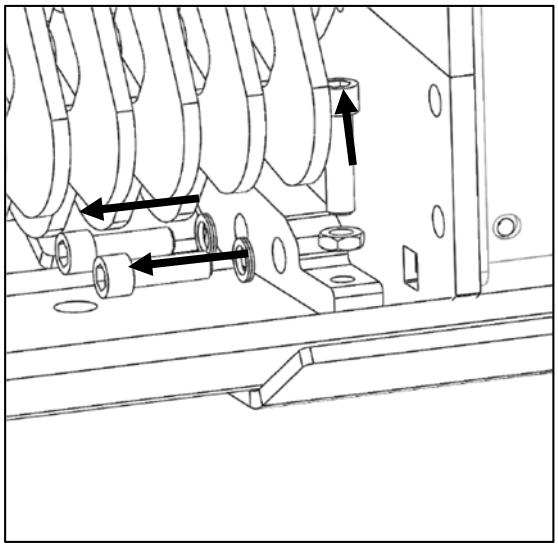

1. Loosen the counter blade lock plate's mounting and adjustment bolts, and remove the lock plates.

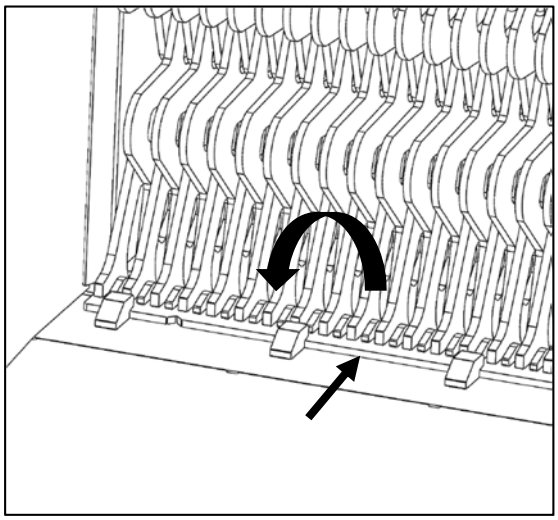

2. Push the counter blade back to release its front edge from under the teeth. Then rotate the blade forward until it slides out of place.

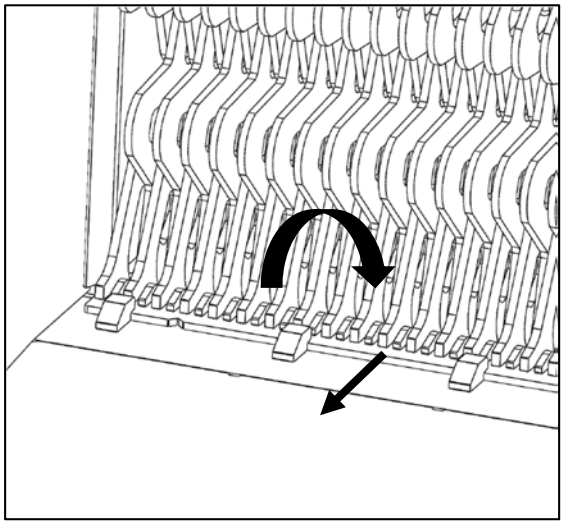

3. Install a new counter blade from the front of the bucket. Drop the front edge of the counter blade in front of the teeth, and push the blade into place by tilting it. Then push the counter blade under the teeth.

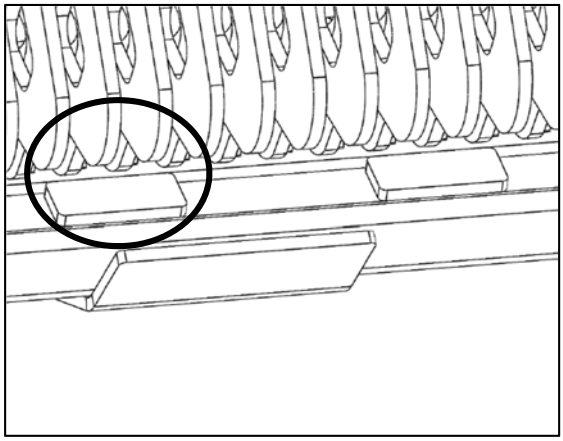

4. Check that the bottom of the counter blade is behind the lock plates located at the back of the bucket.

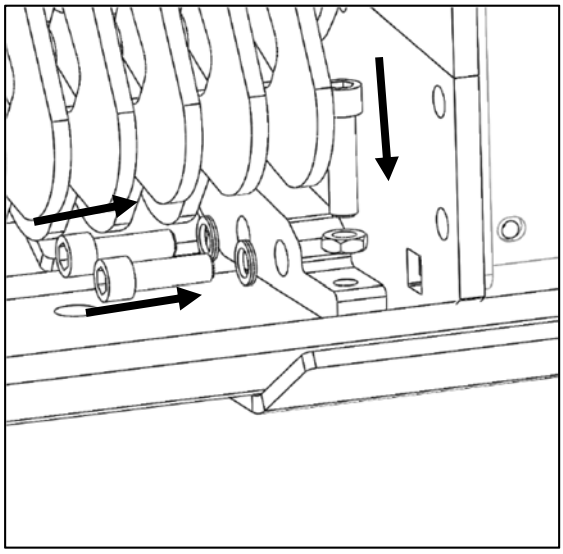

5. Mount the counter blade lock plate. Leave the horizontal bolts loose initially, and tighten the lock plate against the counter blade by means of a vertical locking bolt. Use hard threadlocker for the horizontal bolts.

6. Tighten all the bolts and locking nuts.

4.3.4 Replacement of wear parts in TS models and changing of the end-product size

Number	Item	Note
1	Locking plate	
2	Screen combss	
3	Spacing element	
4	Blade	
5	Hexagonal screw M16 × 80	
6	Lock plate NL16	
7	Fender washer, ∅45 × 4 and ∅55 × 4	∅55 × 4 in the middle
8	Locking nut M16	

With some TS-model Screener crushers, the screening size can be doubled/halved by changing the arrangement of the blades and screens without detaching the drums. The fragment size is determined by either the width of one blade or the total width of two blades. The fragment size can be adjusted as follows:

1. TS16 (one blade) ←→ TS32 (double blade)
2. TS25 (one blade) ←→ TS50 (double blade)

The only component that is changed for a change in fragment size is the spacing element [3]. In addition, when larger fragments are desired, an additional screen comb [2] is required, regardless of the Screener crusher model. The work steps required for doubling/halving the fragment size (TS16 → TS32 or TS25 → TS50) are described below.

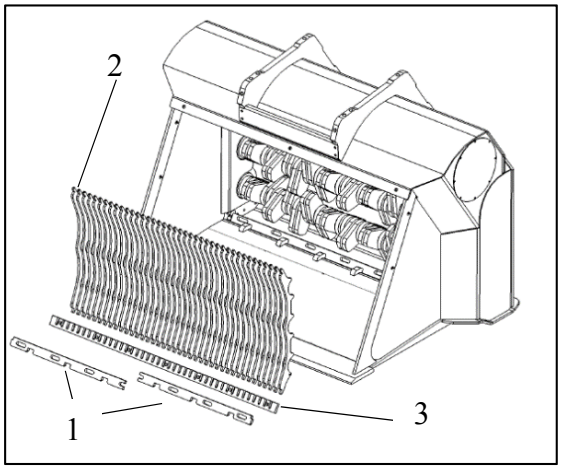

1. Remove the locking plates [1], screen combs [2] and spacing elements [3] from the Screener crusher.

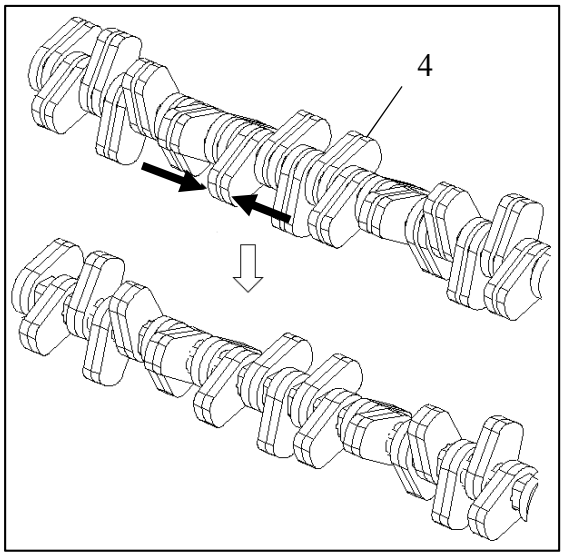

2. Doubling the fragment size: Arrange parallel blades [4] next to each other by moving them along the shaft.

   Halving the fragment size: Separate all the blades from each other.

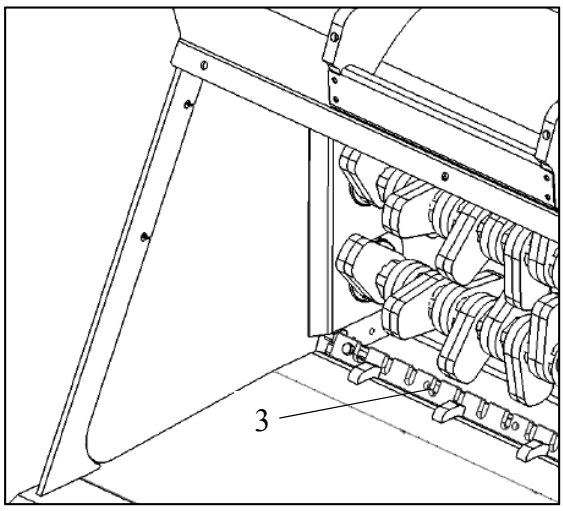

3. Place the spacing elements [3] specific to the desired fragment size in their places. Fix them in place temporarily with one or two bolts, to hold them in position while the combs are being installed.

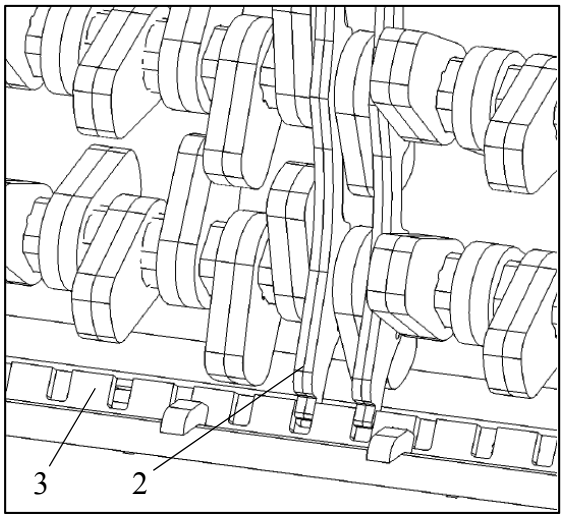

4. Doubling the fragment size: Place a bundle of two screen combs [2] between all non-parallel blade bundles in such a way that the screen comb ends rest in the slots in the spacing elements [3].

   Halving the fragment size: Place an individual screen comb between each pair of blades.

   Begin adding the screen combs from the middle, proceeding toward the sides. If the screen combs have become more worn on one side than the other, they can be turned upside down.

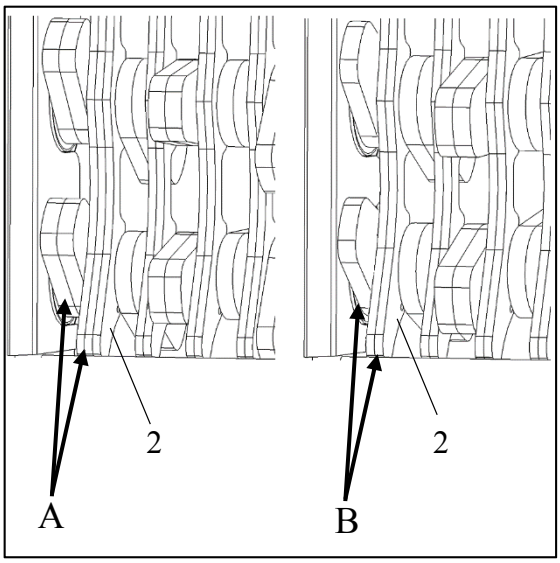

5. At the ends, the blade and screen comb bundles end with either one or two blades; this depends on the model (A or B). Accordingly, at the ends, the screen comb bundles [2] end with either bundles of three screen combs (in models with two blades at the end) or two screen combs (in models with one blade at the end). A model-specific spacing element (see the previous picture [3]) directs the screen combs into the right slots in the correct number.

   Check that the clearances are even along the entire bucket.

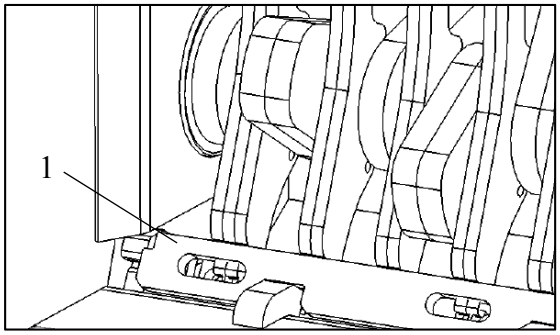

6. Install the locking plates [1].

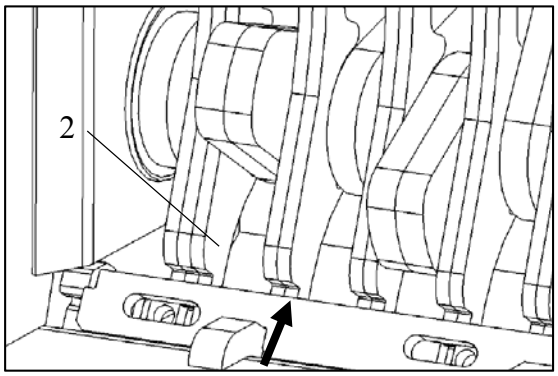

Push the plate upwards, to prevent a large gap between the plate and the screen combs [2].

4.3.5 Replacement of TS blades

⚠ CAUTION

Minimise the risk of hydraulic oil entering the environment by having basins and material absorbing any leaks readily available while opening the covers of the chain housings!

Number	Item	Note
1	Locking plate	
2	Screen combs	
3	Spacing element	
4	Drum	
5	Drum flange	
6	Sleeve	
7	Dust cover	
8	Bearing unit	
9	Hexagonal screw M16 × 80	
10	Lock plate NL16	
11	Fender washer, ⌀45 × 4 and ⌀55 × 4	⌀55 × 4 in the middle
12	Locking nut M16	

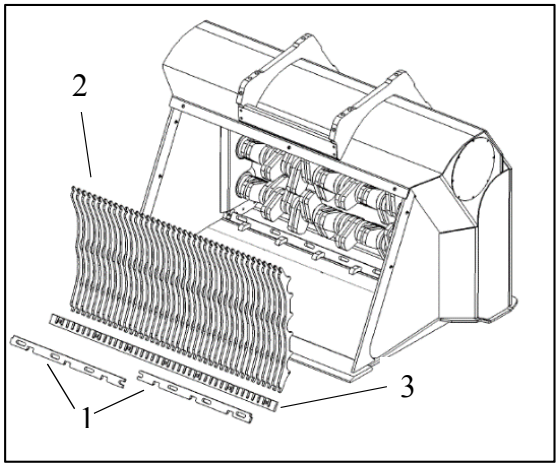

1. Remove the locking plates [1], ccreen combs [2], and spacing elements [3] from the Screener crusher.

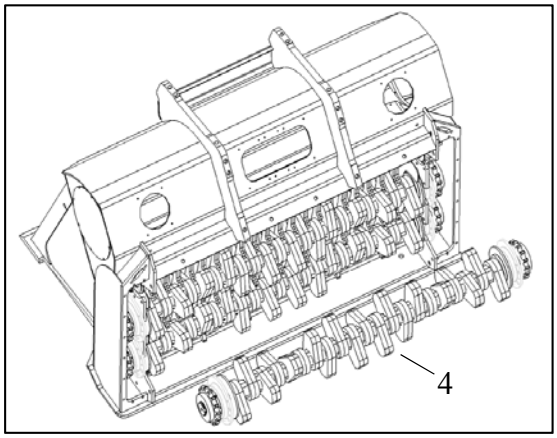

2. Detach the drums [4] in the manner specified in section 4.3.7.

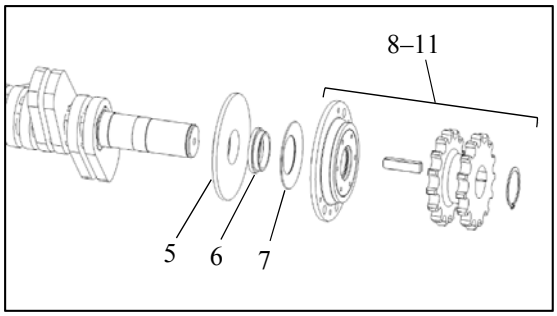

3. Remove the chain wheels and bearing units [8–11] from the drums, following the instructions in section 4.3.8.
4. Detach parts 5–7 from the drums.

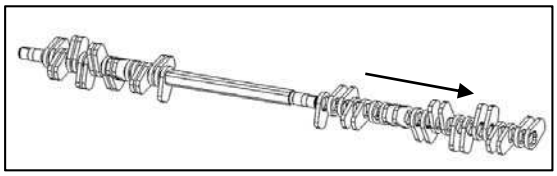

5. Slide the blades off the shaft.

4.3.5.1 Placement of new blades on the shafts

On the drum, the blades form a spiral arrangement, sending material from the sides of the Screener crusher rotating toward the middle when the drum moves in the normal rotation direction. The blade pattern is symmetrical in relation to the middle line of all drums. Begin positioning the blades on the shaft from the middle, with blade no. 1.

Number of blades per drum:

	TS16/TS32	TS25/TS50	TS35
D -12 TS	36	28	20
D -17 TS	54	42	30
D -23 TS	72	54	40

NOTE

Position the blades and the drums carefully in the correct places. Positioning blades in the wrong way could cause the blades of adjacent drums to hit each other.

Positioning of the blades in drums TS16 and TS32:

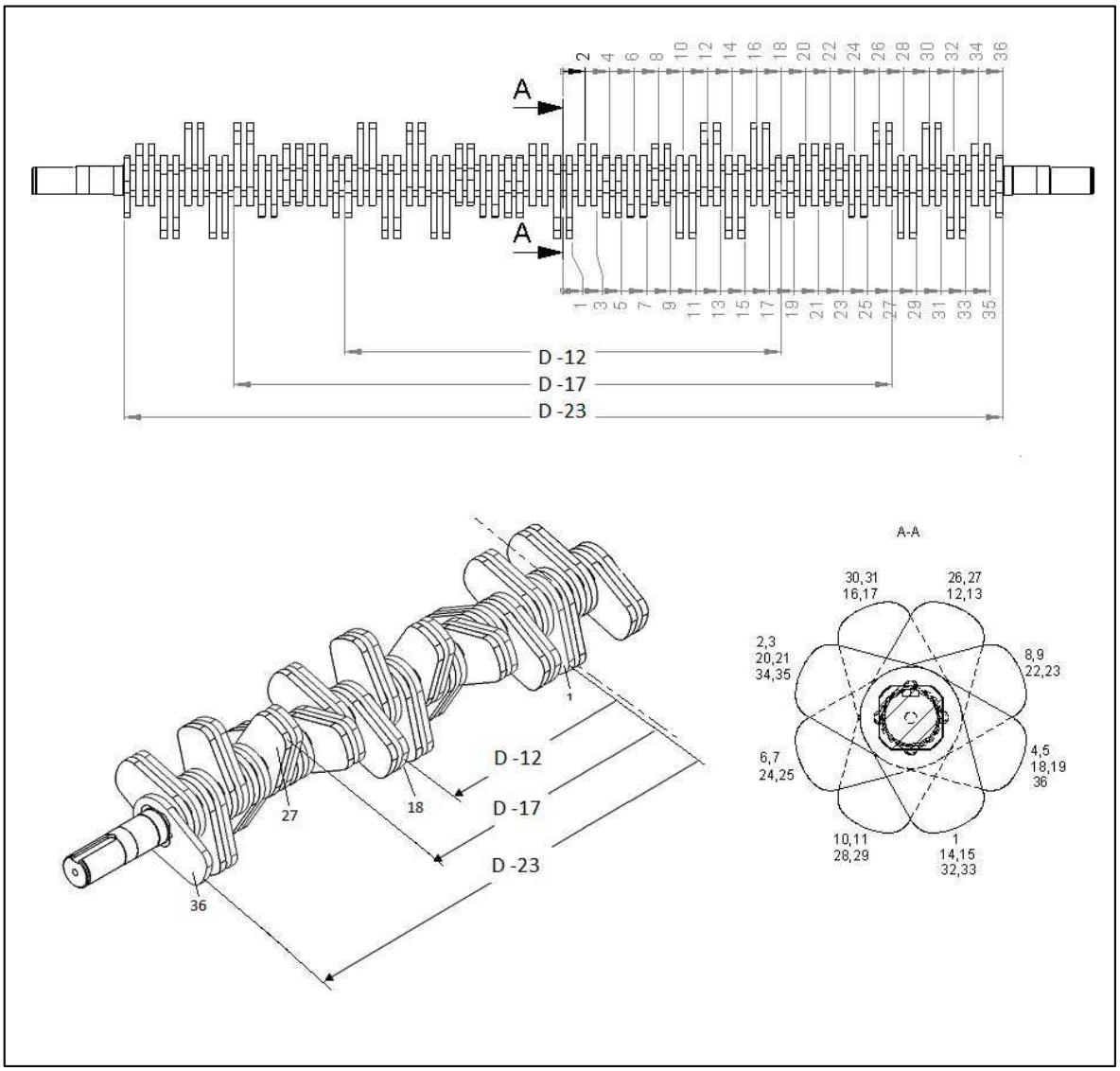

Positioning of the blades in drums TS25 and TS50:

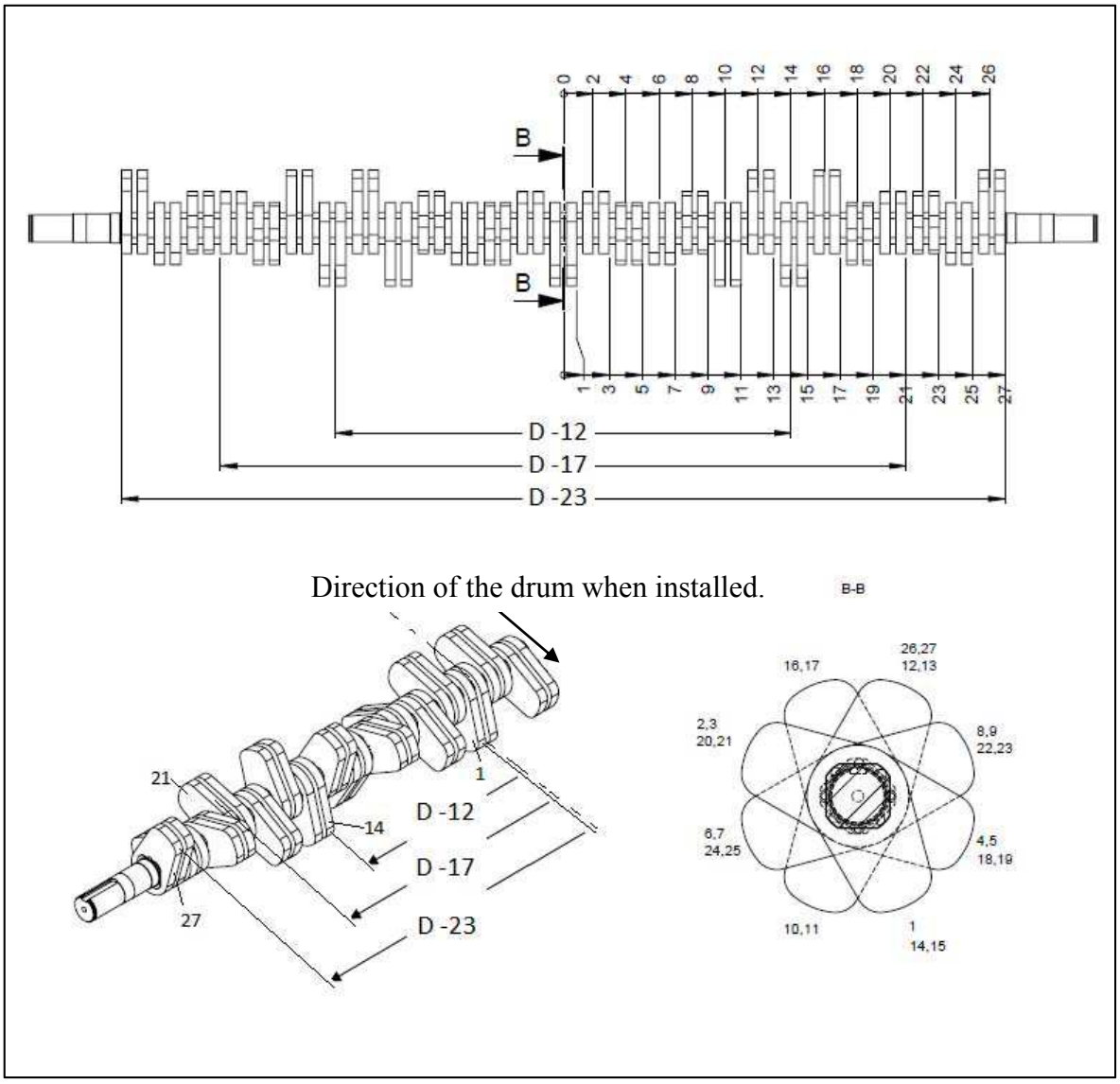

Positioning of the blades in drum TS35:

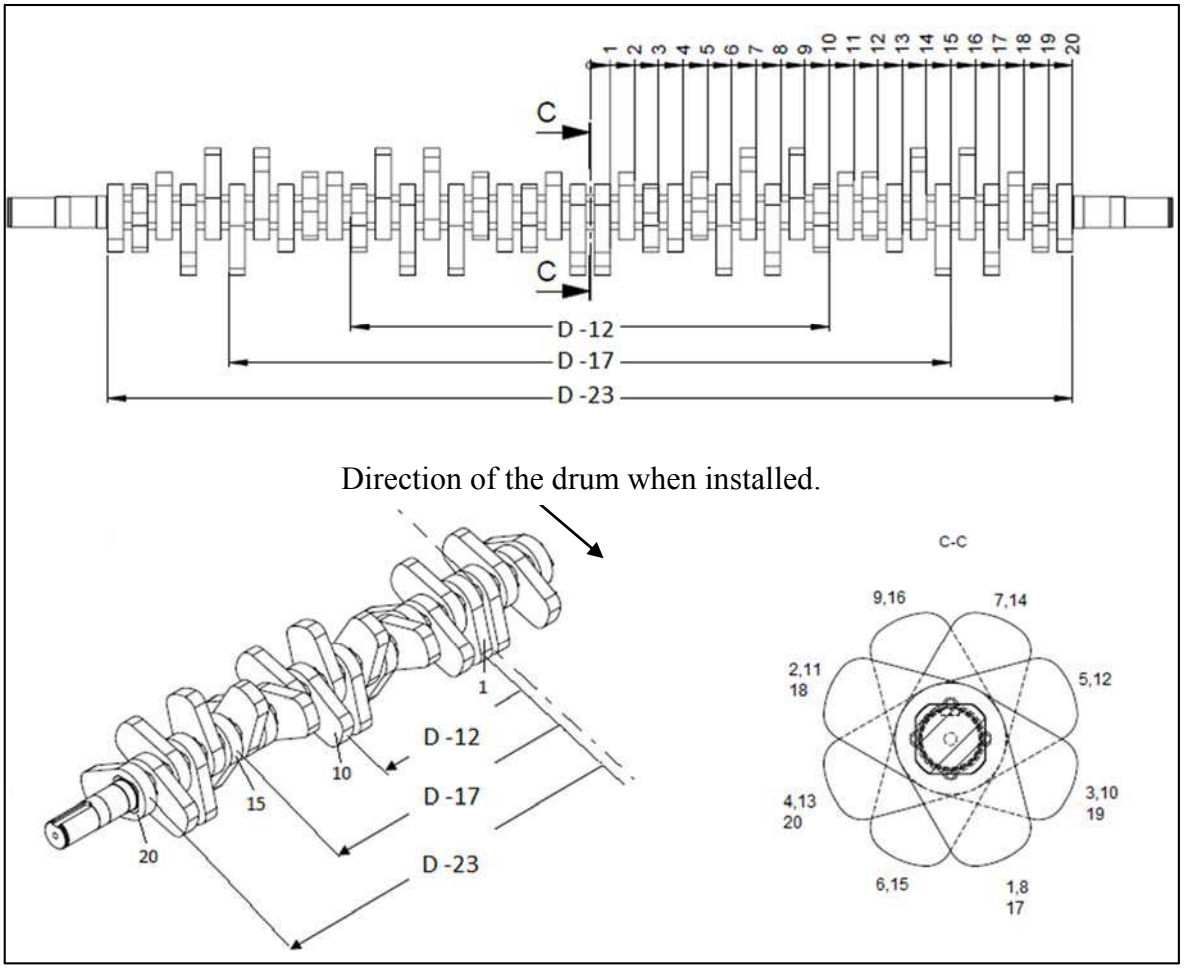

4.3.5.2 Mounting of the TS drums

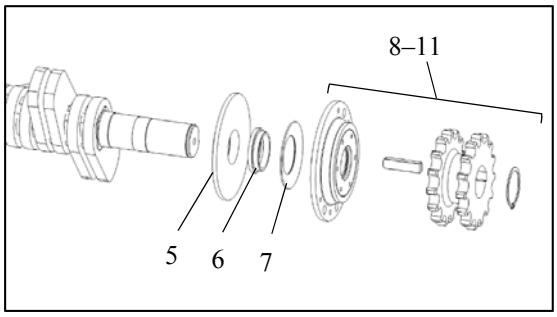

1. Mount parts 5–7 (attach the end flange [5] and the sleeve [6] to the shaft with a soft threadlocker).
2. Mount parts 8–11 in accordance with the instructions in section 4.3.8.

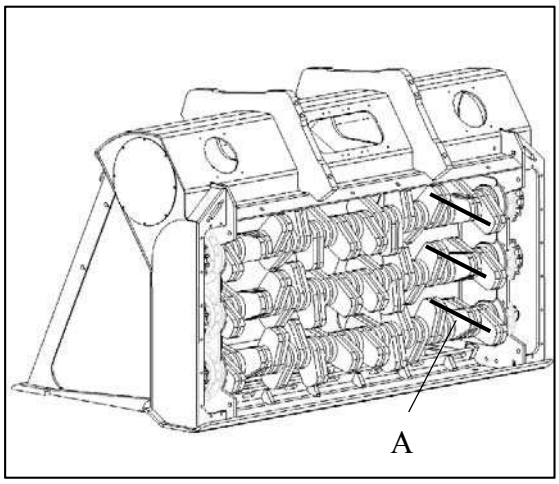

3. Mount the drums in line with the directions in section 4.3.7. Check that the spiral pattern [A] conforms with the picture, to ensure that the drums are installed in the right way.

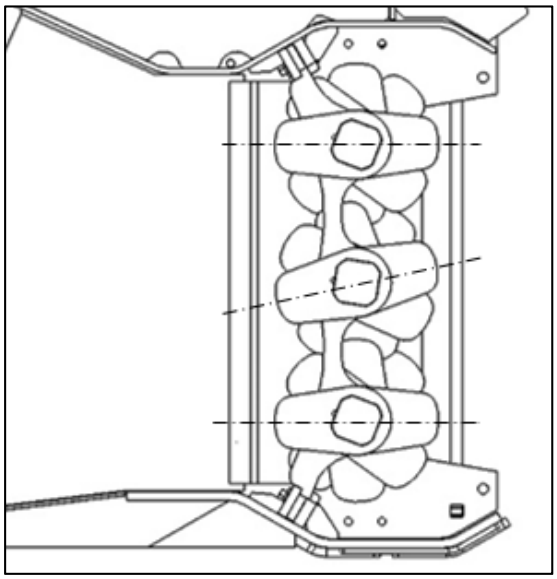

4. The drum blades that are in line with each other should be positioned such that they are parallel to each other before installation of the chain. The arrangement of the chain's links forces adjacent drums into the positions shown in the picture.

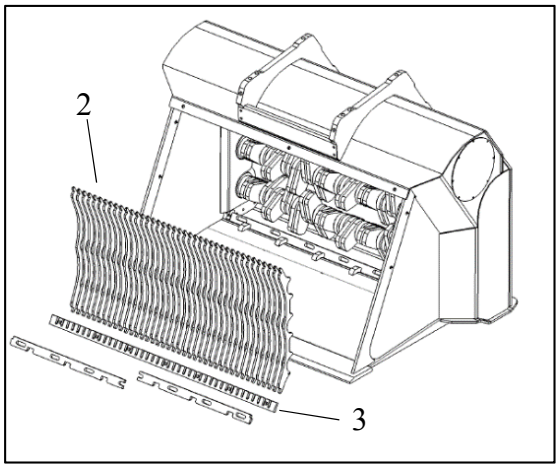

5. Install the spacing elements [3].
6. Mount the screen combs [2] in accordance with the directions in section 4.2.3. Begin adding the screen combs from the middle, proceeding toward the sides. If the screen combs have become more worn on one side than the other, they can be turned upside down.
7. Install the locking plates [1].

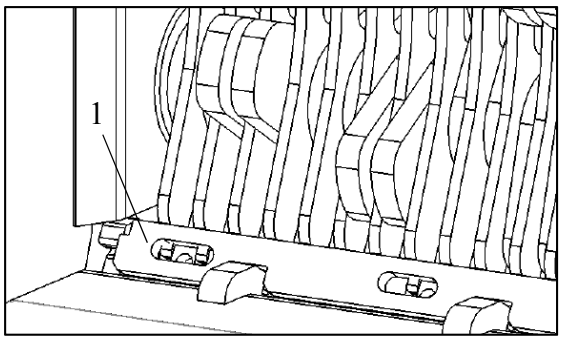

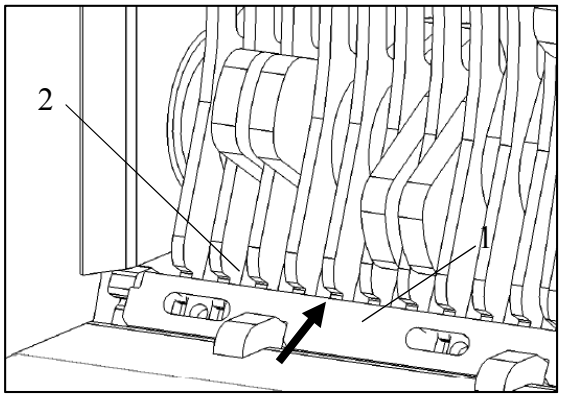

Push the locking plate upwards, to prevent a large gap between the plate [1] and the screen combs [2].

4.3.6 Replacement of the bearing-protection fender

	⚠ CAUTION
	Minimise the risk of hydraulic oil entering the environment by having basins and material absorbing any leaks readily available while opening the covers of the chain housings!

Number	Item	Note
1	Hexagonal screw M16 × 30, 10.9	200 Nm
2	Lock plate NL16	
3	The bearing-protection fender	

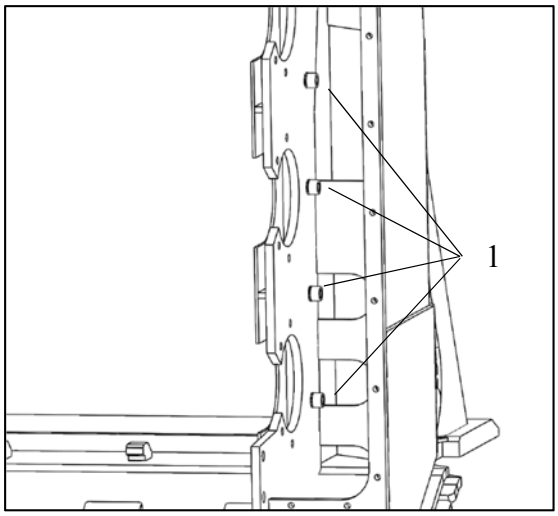

The mounting bolts [1] of the bearing-protection fender can be found in a vertical row inside the chain housing. In the picture, the drums have been removed, but it is possible to replace the bearing-protection fender without taking the drums out.

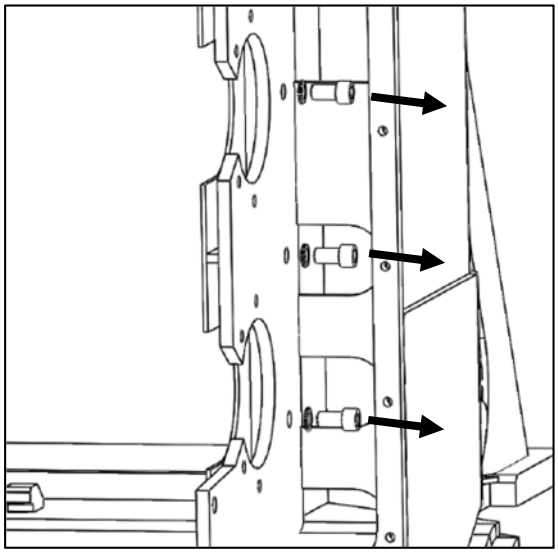

1. Loosen the mounting bolts.

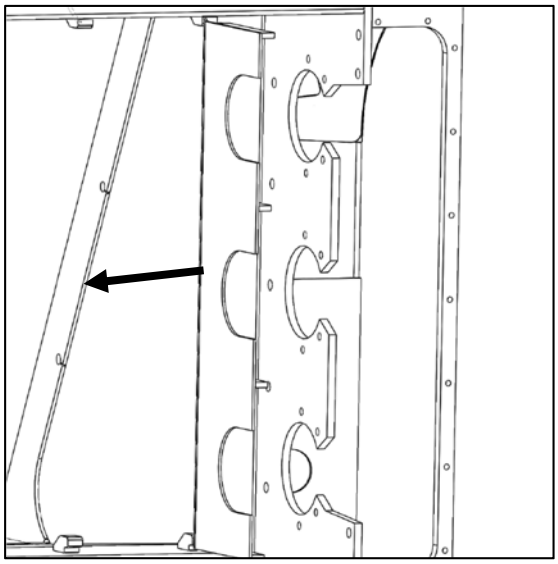

2. Remove the bearing-protection fender. Make sure that the fender does not fall down or over.

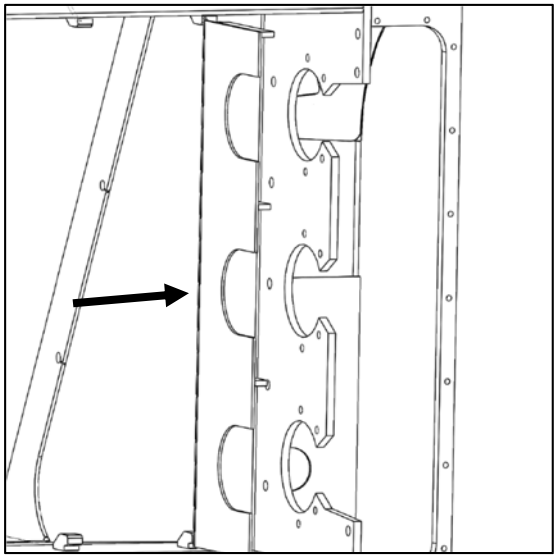

3. Mount the bearing-protection fender. Support it carefully, to prevent it from falling over.

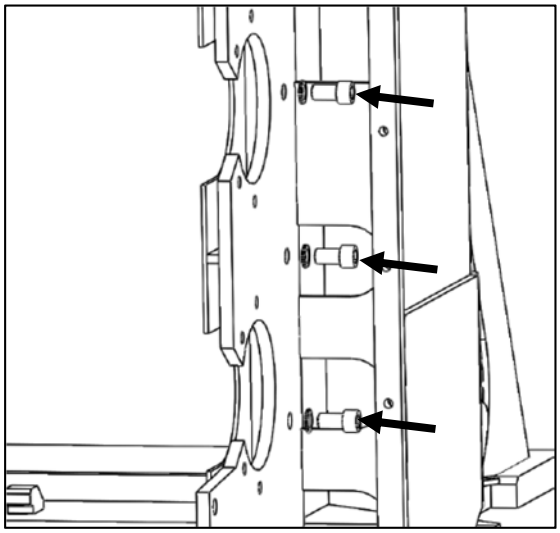

4. Fix the bearing-protection fender's mounting bolts in their places. Use hard threadlocker for the bolts.

4.3.7 Replacement of drums

	⚠CAUTION
	Minimise the risk of hydraulic oil entering the environment by having basins and material absorbing any leaks readily available while opening the covers of the chain housings!

Number	Item	Note
1	Hexagonal screw M16 × 30, 10.9	200 Nm
2	Lock plate NL16	
3	Drum installation	

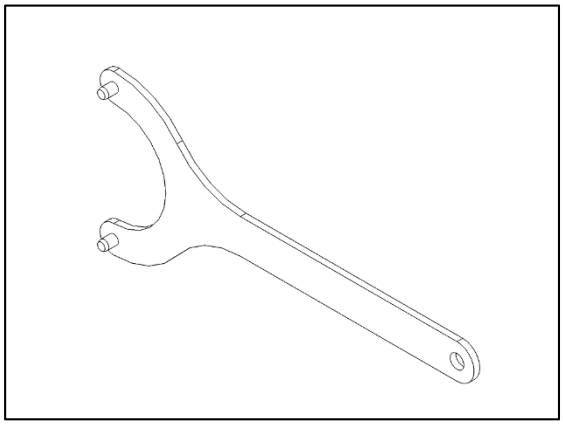

Special tools required:

- Bearing cap key delivered with the machine.

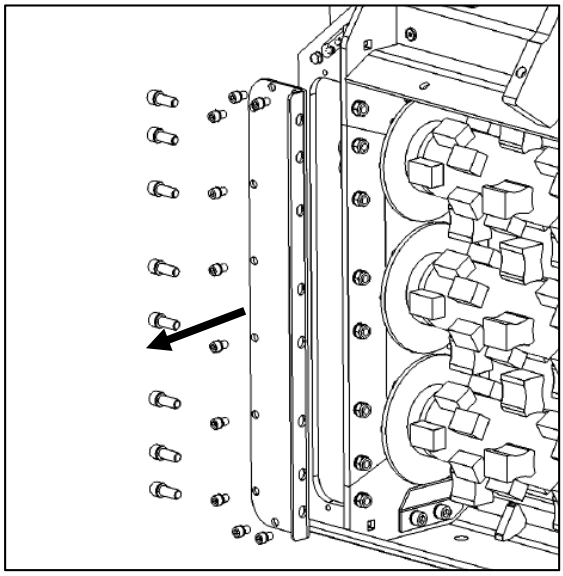

1. Loosen the mounting bolts of the chain housing covers, and remove the covers. Note that lubricant has been added to the chain housings, and some of it may leak out when the covers are removed.

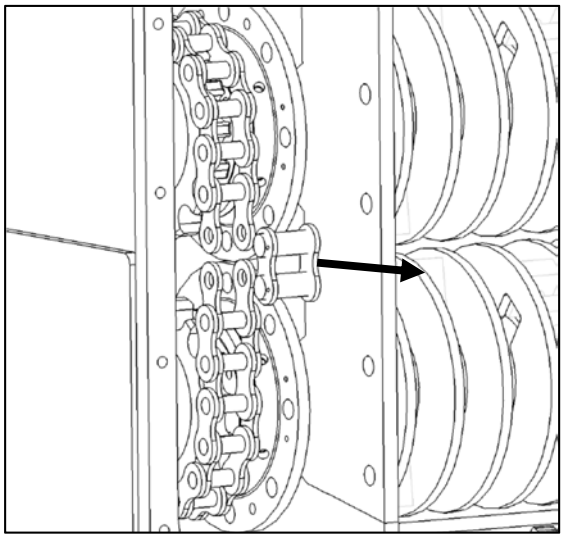

2. Open the chain locks, and remove the chains.

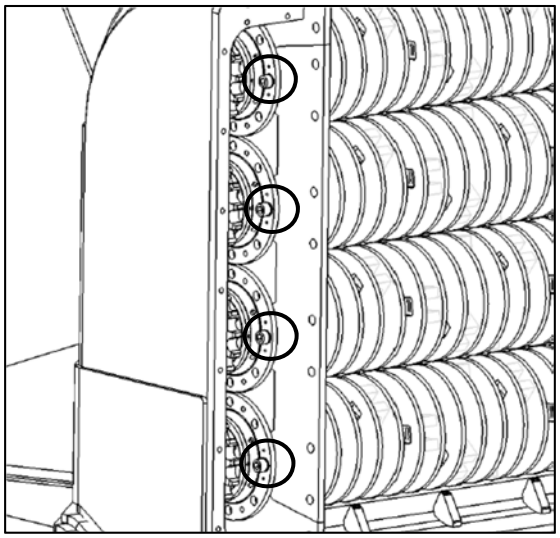

3. Remove the grease tube connectors from the bearing unit.

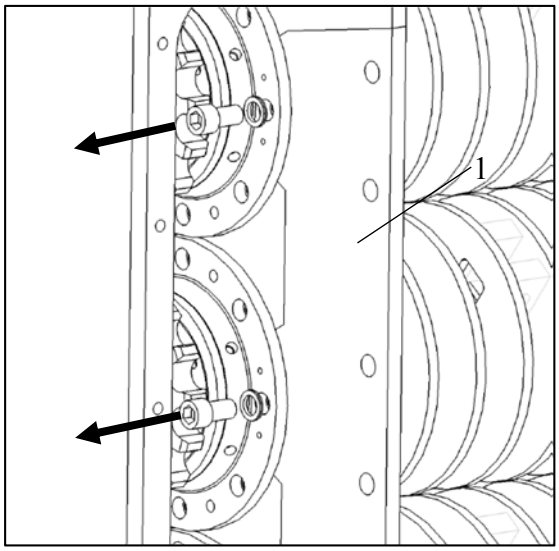

4. Loosen the bearing unit bolts that hold the back plates [1] in place.

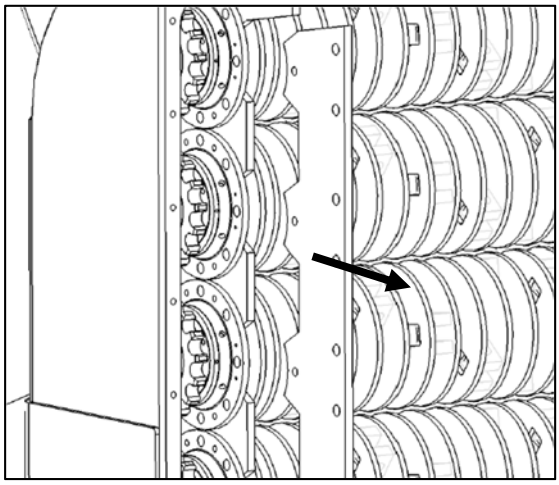

5. Remove the back plates.

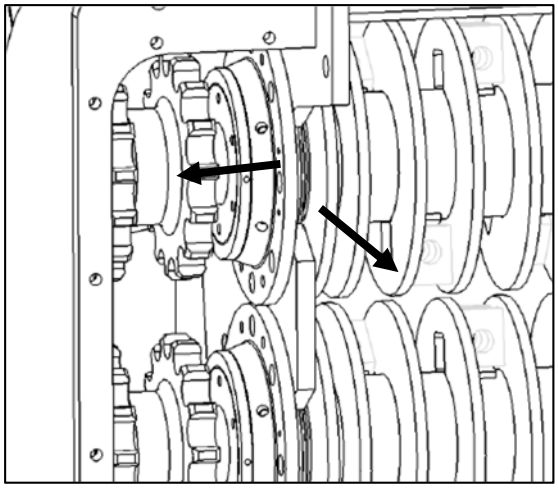

6. Loosen the bearing unit bolts, and push the bearing units out through the slots in the frame's side plates.
7. Remove the drum.

   Use an appropriate hoisting device to which the drum can be secured to prevent it from falling!

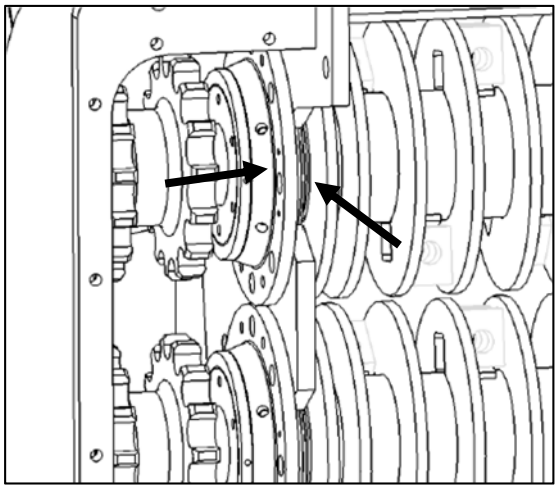

8. Push a new drum into place.
9. Push the bearing units into the positioning slots in the frame. Check that the bearing unit cap has not been tightened – it should be visibly loose!
10. Fix the bearing units' locking bolts in place.

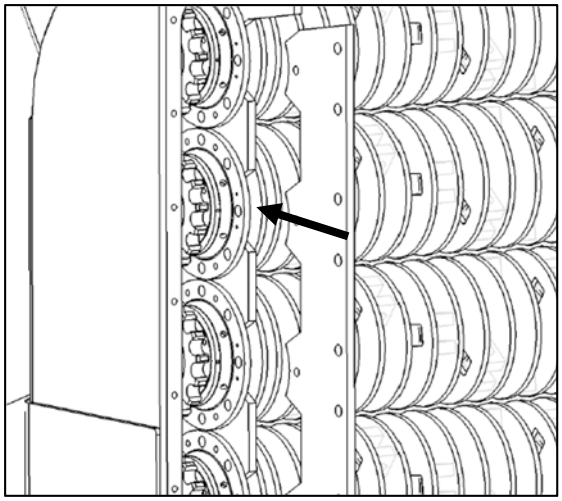

11. Install the back plates.
    The back plates should be sealed in place with a silicone adhesive.
    Silicone should be applied to the frame and back plate surfaces that come in contact with each other.

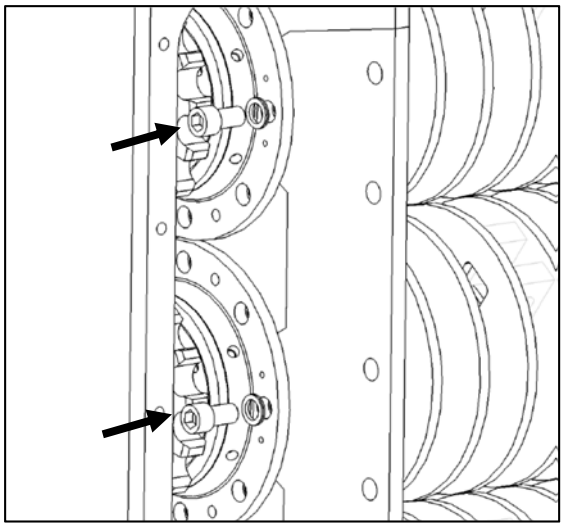

12. Fix the back plate locking bolts in place.

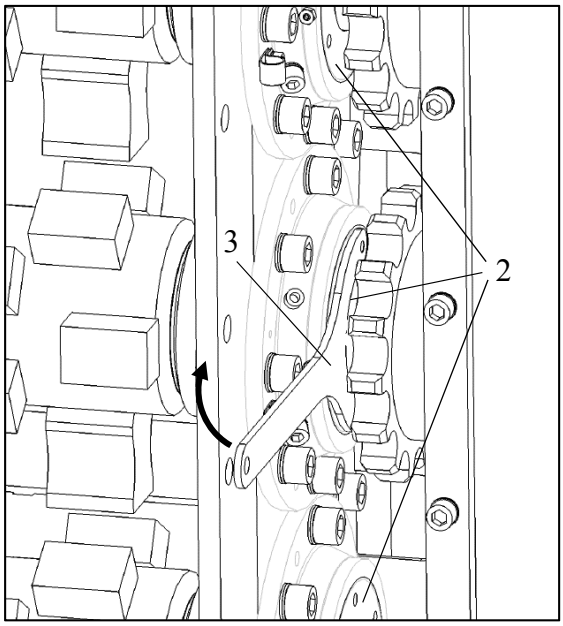

13. Tighten the bearing unit caps [2], using a bearing cap key [3]. The drum must be centred on the frame. Leave axial clearance of about 1 mm.
14. Secure the caps with a set screw and a locking nut. Before fixing the set screw in place, drill a 2 mm hole in the cap through the thread hole, using a 4 mm drill bit for the tip of the set screw.
15. Connect the grease tubes to the bearing housings.

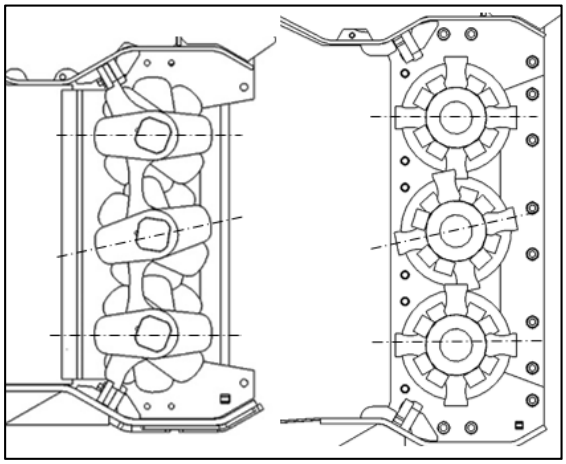

16. In DN, DS, DSH, and DH models, the drum blades that are in line with each other should be positioned such that they are parallel to each other before installation of the chain. The arrangement of the chain's links forces adjacent drums into the positions shown in the picture.

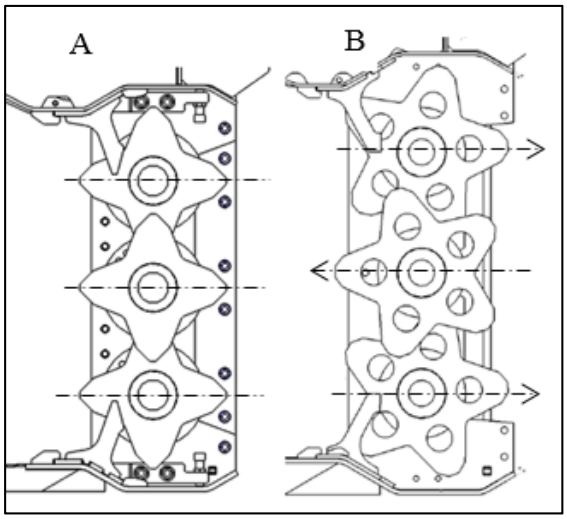

17. In DNS models, the tips of the blades should be positioned so as to be parallel to each other before installation of the chain [A].
18. In DSB and DHB models, the drums are arranged as shown in the picture [B], in such a way that the phase difference between the drums is around 36°.

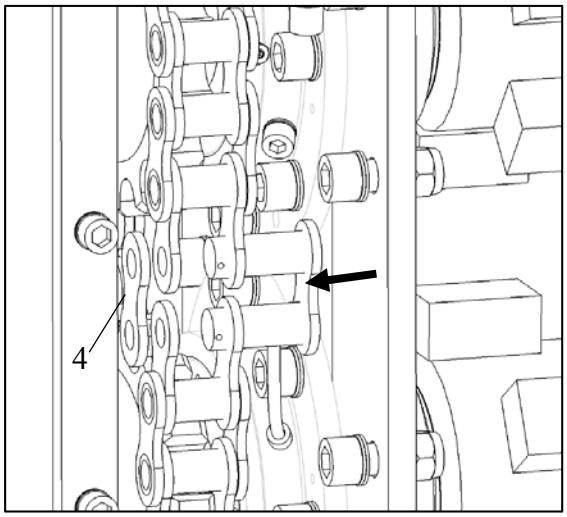

19. Install the chains, and fix the chain locks in their places. The lock plate [4] and lock pins are installed from the side of the chain housing's exterior wall.

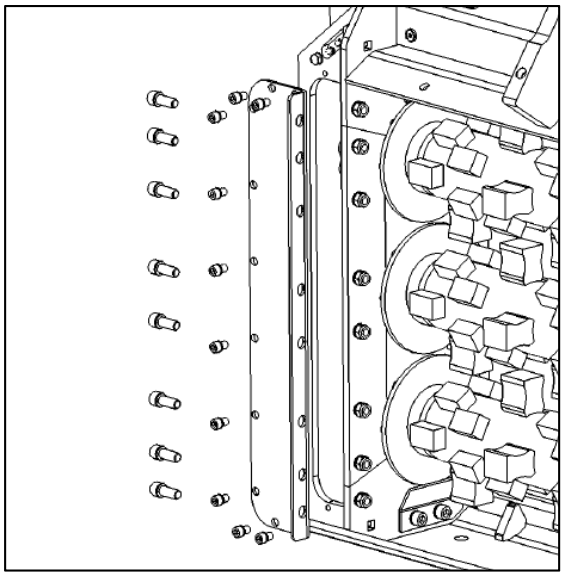

20. Attach the covers. The covers should be sealed in place with a silicone adhesive. Clean the surfaces before applying silicone.

4.3.8 Removal and installation of bearings and chain wheels

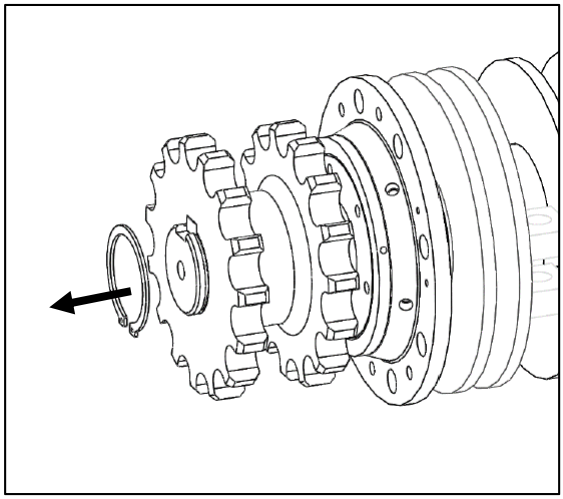

1. Remove the chain wheel's lock ring.

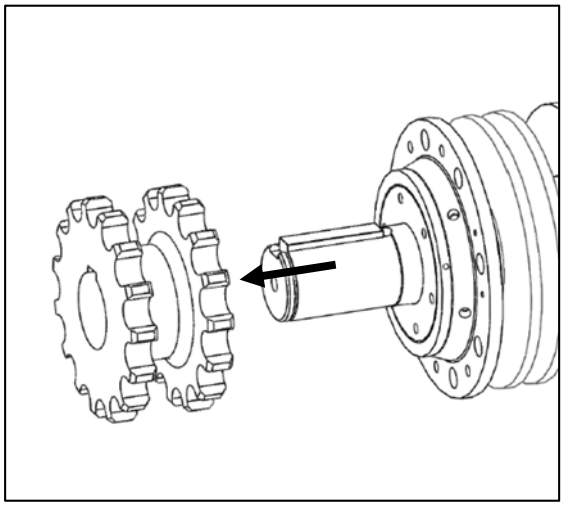

2. Loosen the chain wheel with an extractor tool.

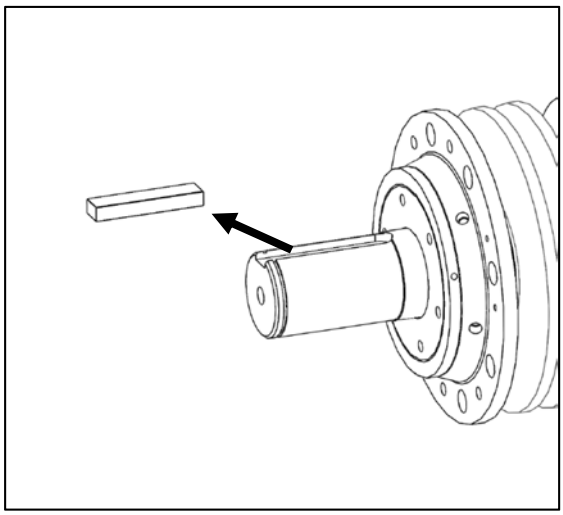

3. Remove the wedge.

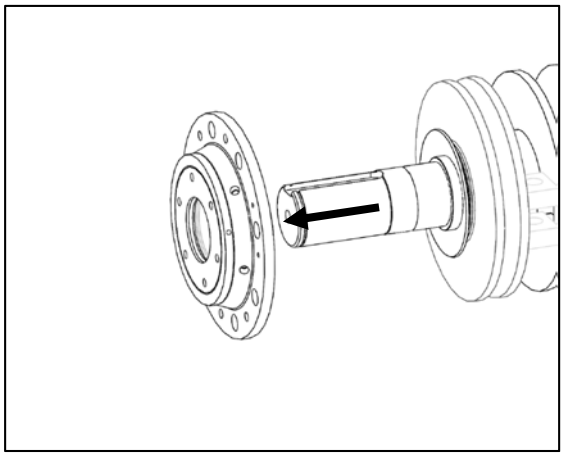

4. Pull the bearing unit off the shaft with an extractor tool.

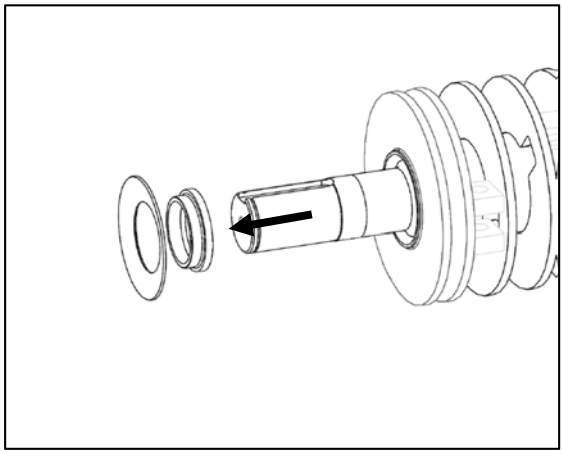

5. Remove the sealing plate and the end sleeve from the drum end.
6. Clean the groove at the end of the drum carefully, to remove any remains of sealant.

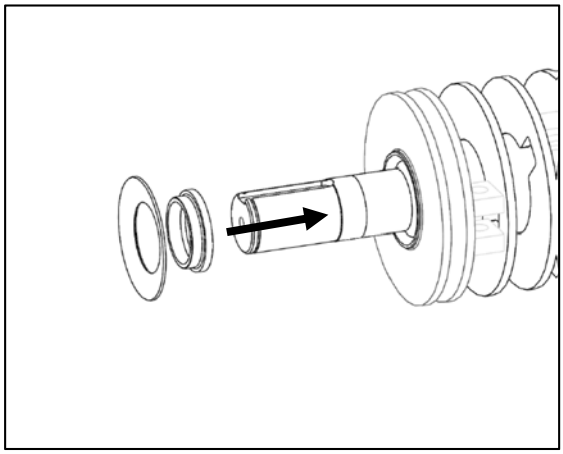

7. Install a new end sleeve and sealing plate at the end of the drum. The sleeve is secured with, for example, sealant to prevent the end sleeve from rotating.

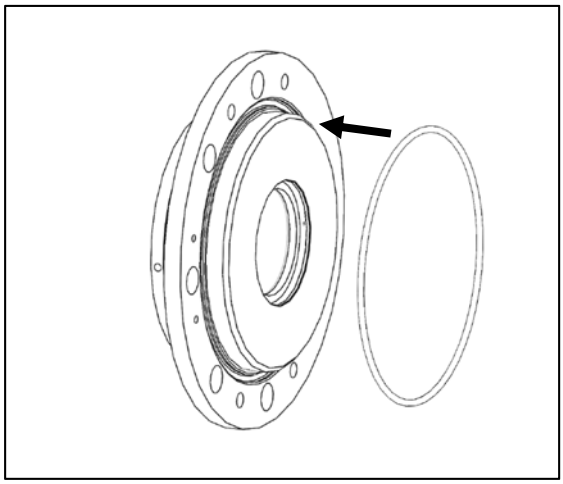

8. Install a new O-ring for the bearing unit.

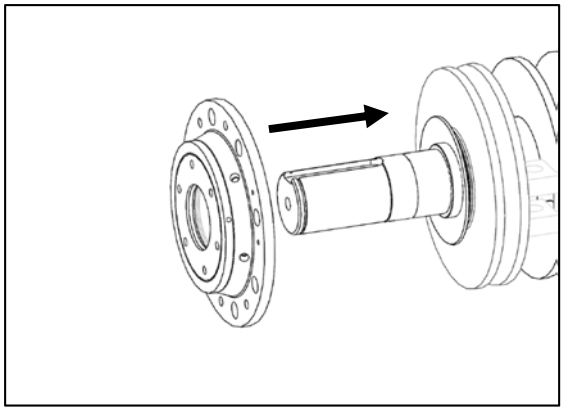

9. Mount the bearing units on the drum shaft. Make sure not to damage the seal in the bearing unit cap.

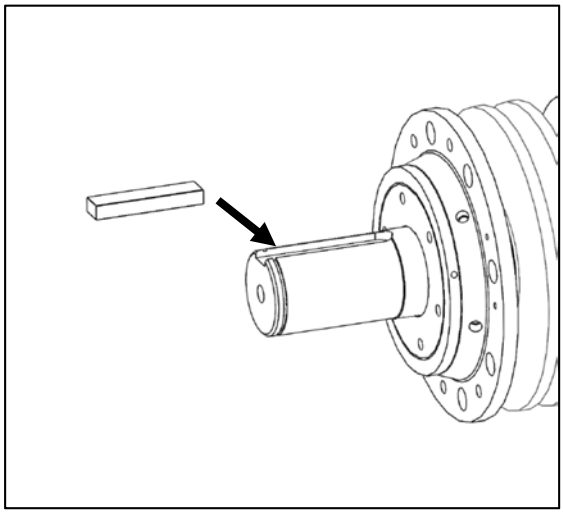

10. Install the wedge.

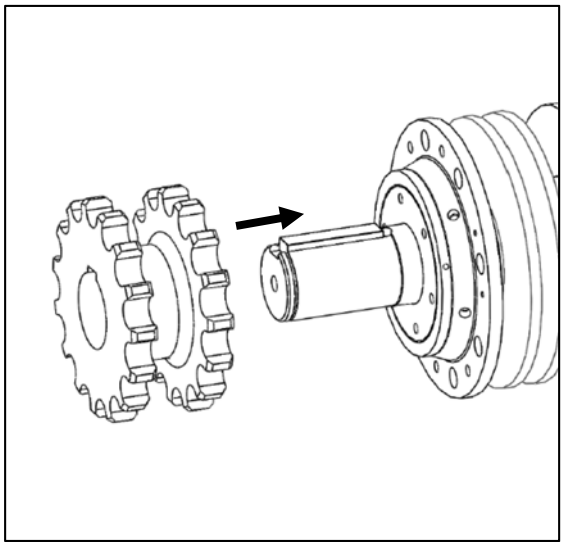

11. Lubricate the shaft, and install the chain wheel.

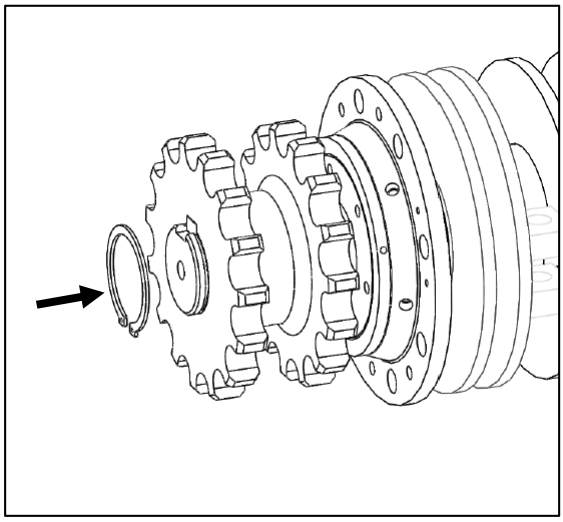

12. Install the chain wheel's lock ring.

4.3.9 Maintenance of the bearing unit

A worn bearing unit may be replaced or, alternatively, can be serviced, if the frame is intact, by replacement of the bearing and the seal.

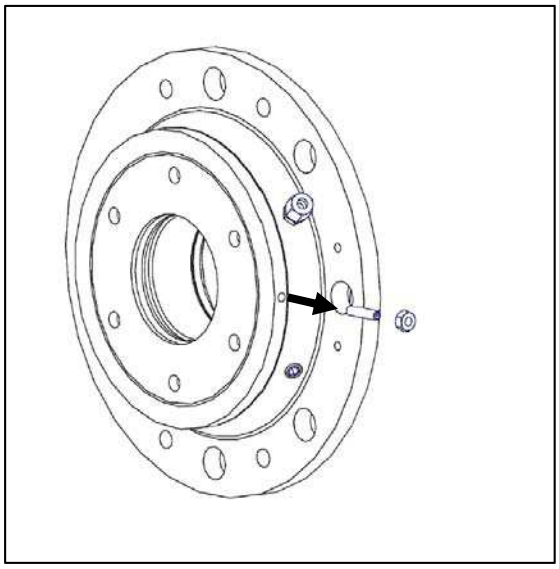

1. Loosen the set screw and its locking nut.

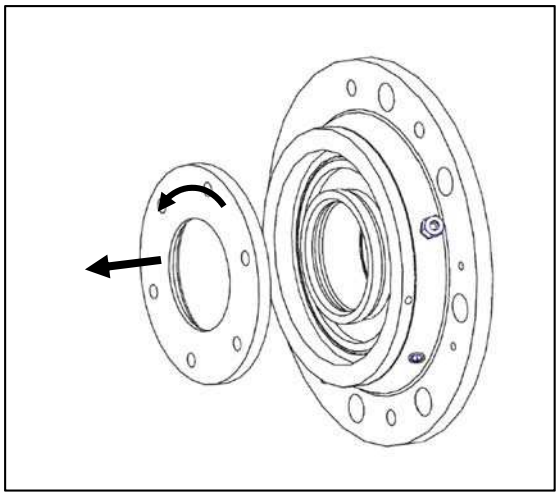

2. Loosen the bearing unit's cap by turning it.

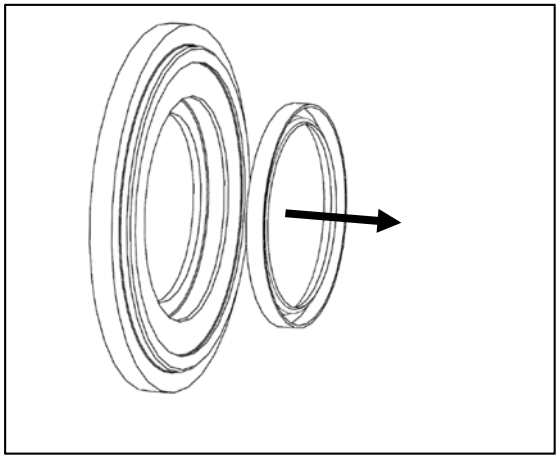

3. Remove the radial shaft seal from the cap.

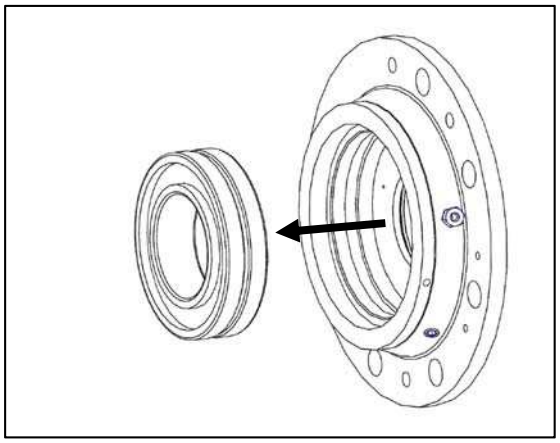

4. Remove the bearing from its housing.

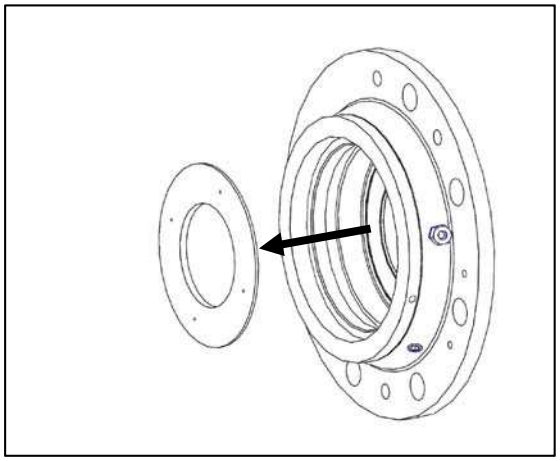

5. Remove the sealing plate.

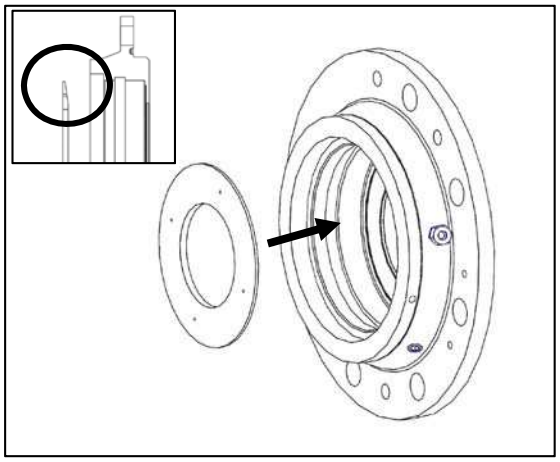

6. Mount a new sealing plate in place. Note the correct mounting direction, parallel to the bearing!

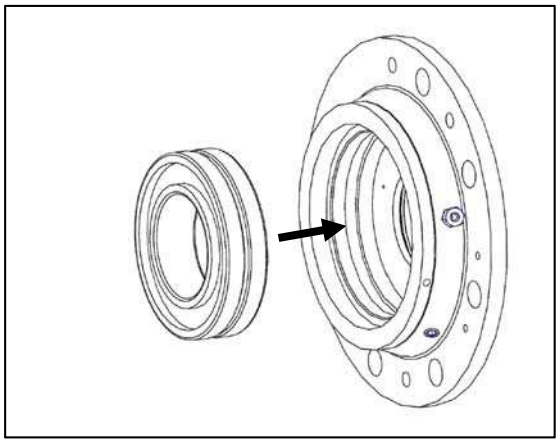

7. Install a new bearing.

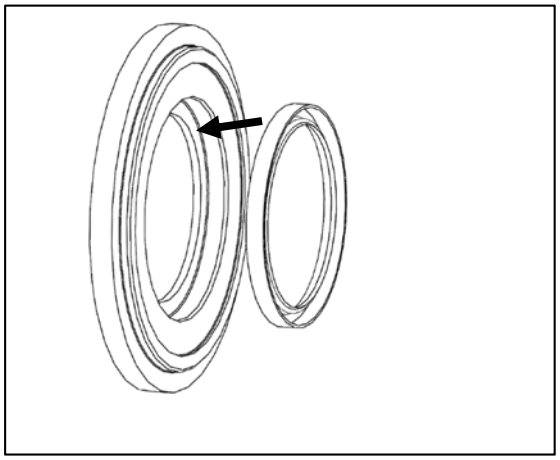

8. Place a new radial shaft seal on the bearing unit's cap. Make sure to install the seal the right way round.

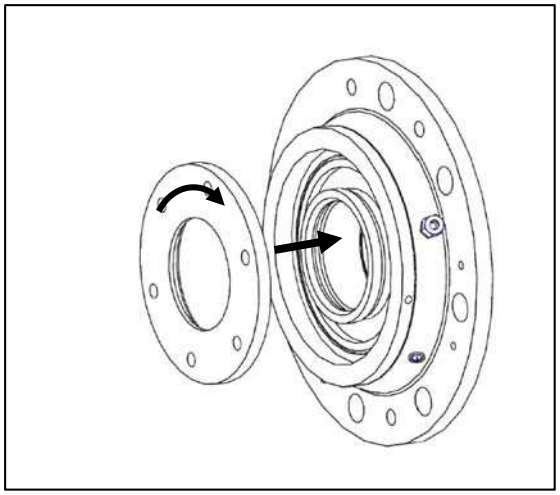

9. Place the cap in its place loosely. **Do not tighten it yet!**

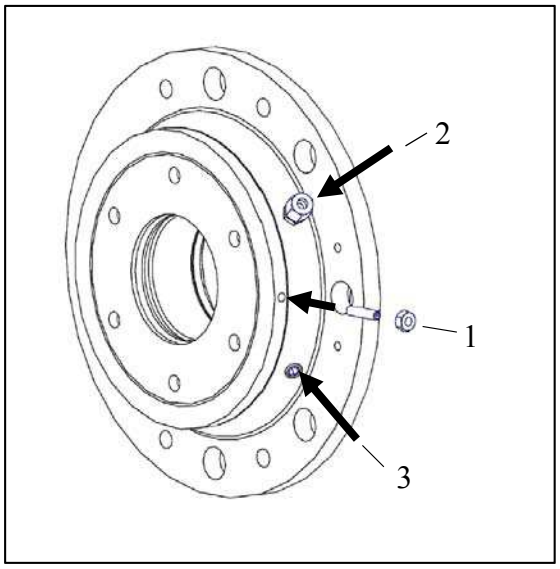

10. Put the set screw and nut [1] in their places loosely, but do not tighten them before the drums have been adjusted.
11. Fix the lubricant output connector [2] and hex plugs [3] in their places, using thread sealant.

4.4 Troubleshooting

	⚠ WARNING	
  	Before inspecting, opening, or attaching hose connections or performing inspection of moving components, turn off the base machine and depressurise the hydraulic system by moving the control lever of the auxiliary hydraulic system with only the starter motor turned on.Under no circumstances place your hands between rotating parts while the Screen crusher is attached to the base machine. Exposure to high-pressure oil spray or getting caught between rotating parts causes a risk of death or serious injury. **Take the appropriate precautions when inspecting the machine in a danger zone!**	 

	⚠ CAUTION
	Minimise the risk of hydraulic oil entering the environment by having basins and material for absorbing any leaks available while connecting the hydraulic system and performing inspections!

1. **The Screener crusher drums do not rotate or the Screener crusher does not have enough power:**

   - Check that fragments of the material being processed have not become caught between the drums and stationary components and components become loose.

   - Make sure that both operating hoses are properly connected.

   - The Screener crusher with a drain line: Inspect the motor(s) for internal leakage by detaching the drain line before starting drum rotation. If a large quantity of oil sprays from the Screener crusher's drain connection, the hydraulic motor is damaged.

   - Screener crushers with a drain-line eliminator: Detach the drain line leading from the motor from the eliminator valve's DR port (the valve can be found behind the right-hand back plate) and start drum rotation; if a large quantity of oil sprays out of the drain line, the hydraulic motor has suffered wear.

   - Two-motor Screener crushers: If the drums do not rotate at all, loosen the chains of both motors and start drum rotation. Check that the shafts of both motors rotate. If one of the shafts does not rotate, the hydraulic motor in question may be damaged.

   - Measure the pressure from the MA and MB ports (plugged G1/4" connectors between the operating ports) by rotating the drums of the empty Screener crusher in both directions. If the operating pressure exceeds 80 bar but the back pressure remains below 40 bar, something is physically preventing the drums from rotating freely.

   - Measure the pressure from the MA and MB ports while working with the Screener crusher and in a blockage situation in both rotation directions. When the crusher is blocked, the maximum pressure should be around 280–300 bar or, if the pressure setting of the base machine is below 280 bar, be equal to that value. If the pressure remains considerably lower, the problem may lie in the power control valve (DPV) or hydraulic motor.

- If these steps do not aid in the identification of the fault or if the problem seems to lie in the hydraulic motor or the power-restriction valve, contact your ALLU representative.

2. **Oil leaks from the sieve located next to the operating ports (at the drain-line eliminator's safety valve):**

   - Measure the pressure from the eliminator valve's measurement point. The valve is behind the right-hand back plate. The pressure should remain below 30 bar in the following situations:
     - When the base machine's engine is idling and the Screener crusher or the booms are not being used
     - When the drums of an empty Screener crusher are being rotated in either direction
     - When the drums of an empty Screener crusher are being rotated in both directions while the base machine's booms are being operated
   - If the pressure exceeds 60 bar and there is some leakage, the eliminator's safety valve is functioning properly. In this case, the leakage is caused by high back pressure in the base machine's return line and the only way to prevent leaking is by installing a low-pressure return line for the base machine and removing the drain-line eliminator. Contact your ALLU representative.
   - If the pressure remains below 30 bar and leakage occurs with both rotation directions, the eliminator's safety valve has become either stuck or damaged. If leakage occurs in only one rotation direction, one of the eliminator's non-return valves has become stuck. Remove and clean the valves (see the spare-parts list) or contact your ALLU representative.

3. **The base machine is losing hydraulic oil and/or oil is leaking from the Screener crusher's chain housing or top housing:**
   - Remove the round chain housing end covers (in single-motor models, remove only the cover that is on the left as viewed from behind) and start the drum rotation. If oil leaks from the bottom of the hydraulic motor shaft, the motor's axial seal is damaged. Contact your ALLU representative.

4.5 Disposal

	⚠CAUTION
	Minimise the risk of hydraulic oil entering the environment by having basins and material for absorbing any leaks available while disconnecting the hydraulic system and dismantling the Screener crusher!

A Screener crusher that has come to the end of its service life is composed mainly of metals that can be recycled. Take the following steps before dismantling the machine for waste metal:

- Remove the hydraulic oil from the hydraulic hoses and motor.
- Remove the lubricant mixture from the chain housing.
- Detach all internal hydraulic hoses and grease tubes.

Dispose of the metal waste, oily tubes, and oil waste in an appropriate manner in accordance with locally applicable guidelines and regulations.

5 TECHNICAL DESCRIPTION

5.1 Mounting dimensions

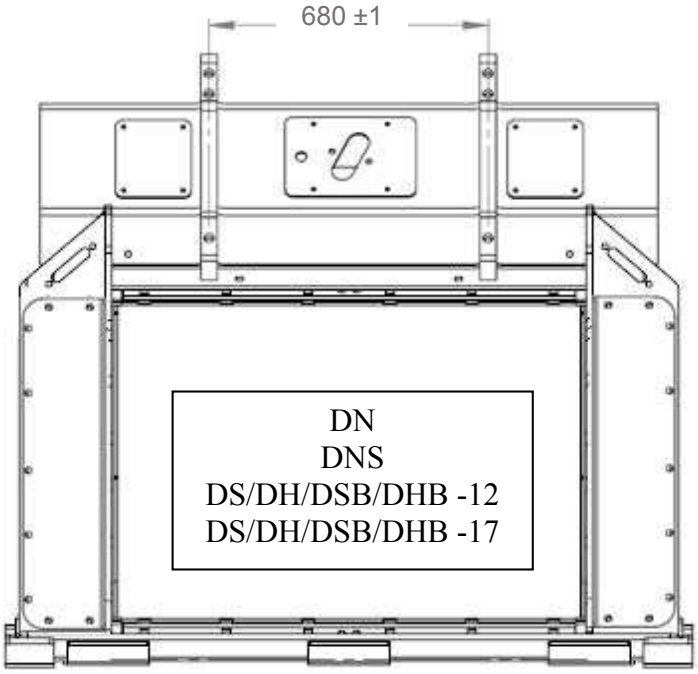

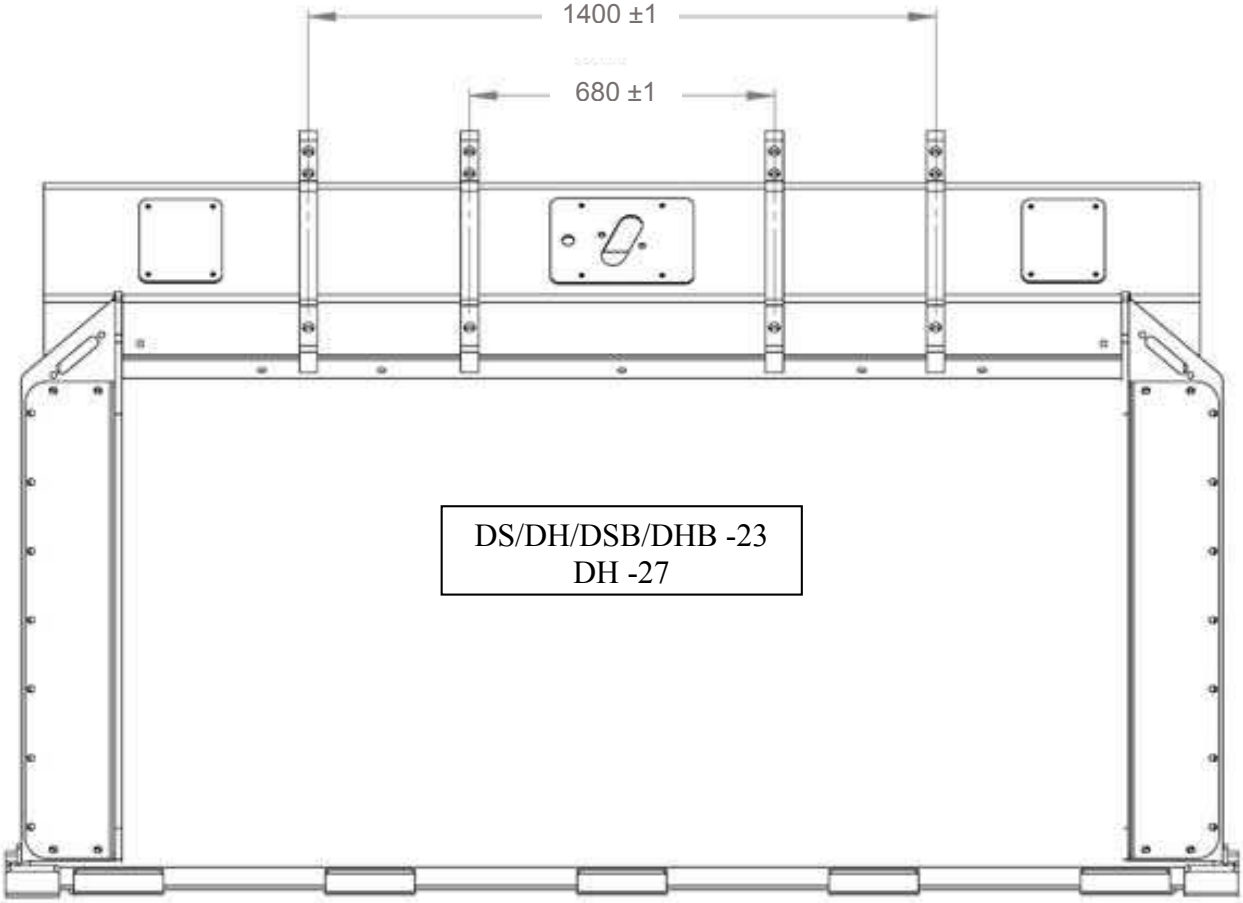

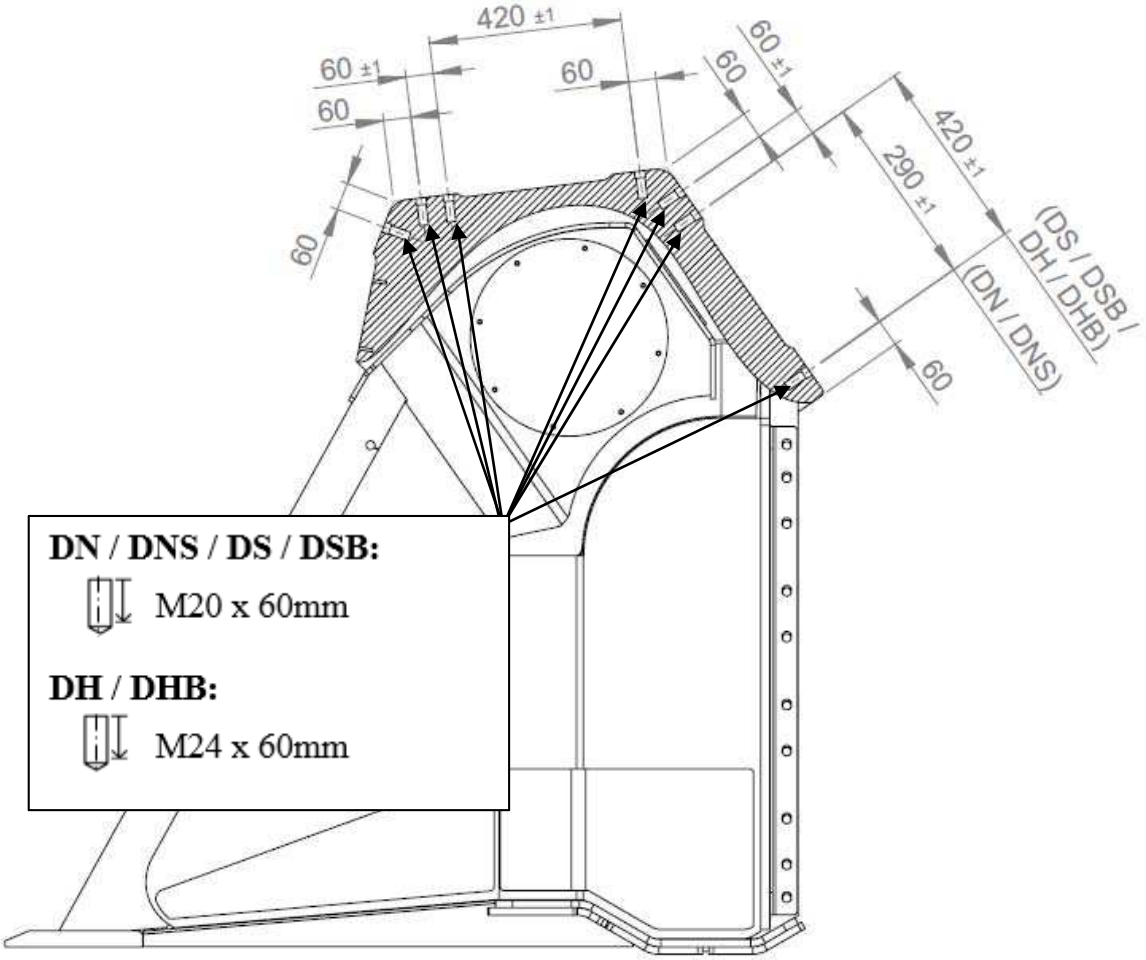

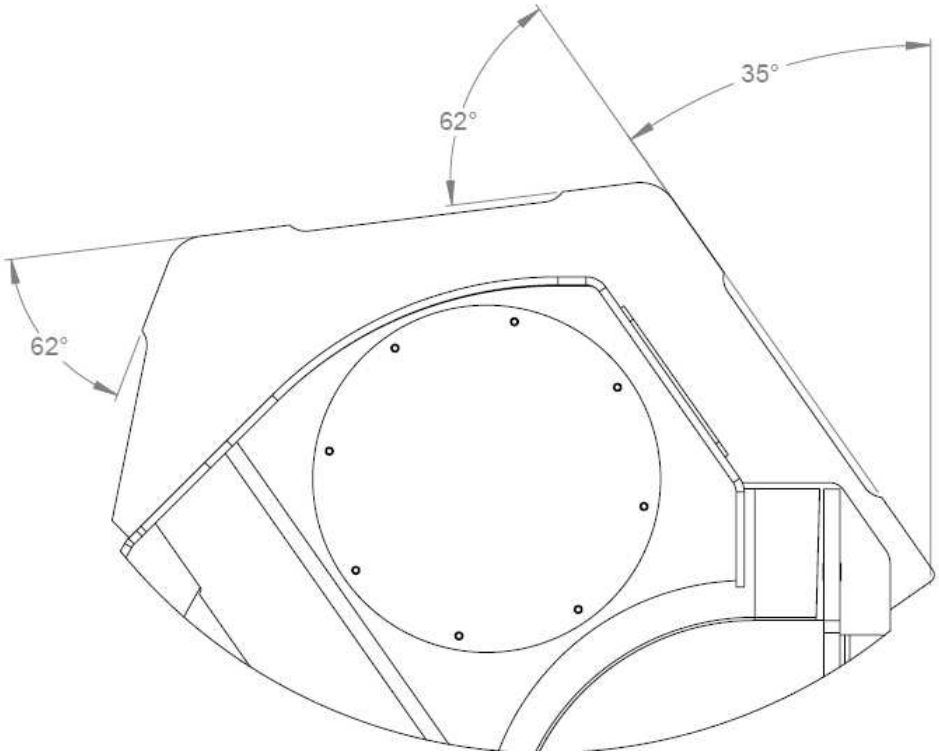

5.2 Technical specifications

	MINIMUM operating weight for the base machine (t)				Hydraulic flow (drums' rotation speed)	Hydraulic motors	Volume, ISO/SAE	Screening area	Dimensions (h × d × w)	Weight (without adapters and accessories)
	Excavator		Wheel loader							
	Density of material									
	0.9 t/m³	1.9 t/m³	0.9 t/m³	1.9 t/m³	L/min (rpm)	Pcs	m³	m²	cm	kg
DN										
DN 2-09	16	22	8	11	70–120 (150–250)	1	0.5/0.6	0.5	111 × 128 × 125	940–970
DN 2-12	20	25	9	14	70–120 (150–250)	1	0.6/0.7	0.6	111 × 128 × 151	1070–1100
DN 2-17	24	32	12	17	70–120 (150–250)	1	0.9/1.0	0.9	111 × 128 × 205	1330–1380
DN 3-09	20	25	10	13	70–120 (150–250)	1	0.7/0.8	0.7	136 × 140 × 125	1150–1200
DN 3-12	24	32	12	18	95–160 (150–250)	1	1.0/1.2	0.9	136 × 140 × 151	1330–1390
DN 3-17	30	*	14	22	95–160 (150–250)	1	1.3/1.5	1.4	136 × 140 × 205	1660–1730
DN 3-12 TS	16	20	7	10	125–160 (150–250)	1	1.0/1.2	0.9	136 × 140 × 151	1390–1410
DN 3-17 TS	20	24	9	13	160–200 (150–200)	1	1.3/1.5	1.4	136 × 140 × 205	1760–1780
DNS										
DNS 2-09	10	14	4	6	80–165 (100–200)	1	0.5/0.6	0.5	111 × 128 × 125	1030–1070
DNS 2-12	12	16	6	8	80–165 (100–200)	1	0.6/0.7	0.6	111 × 128 × 151	1180–1240
DNS 2-17	15	20	7	10	100–200 (100–200)	1	0.9/1.0	0.9	111 × 128 × 205	1480–1600
DNS 3-09	12	16	6	8	80–165 (100–200)	1	0.7/0.8	0.7	136 × 140 × 125	1250–1340
DNS 3-12	16	20	7	10	100–200 (100–200)	1	1.0/1.2	0.9	136 × 140 × 151	1460–1560
DNS 3-17	20	24	9	13	100–200 (100–200)	1	1.3/1.5	1.4	136 × 140 × 205	1830–2000
DS										
DS 3-12	16	22	8	11	95–160 (150–250)	1	1.0/1.2	0.9	144 × 151 × 161	1620–1670
DS 3-17	20	25	9	14	95–160 (150–250)	1	1.3/1.5	1.4	144 × 151 × 215	1990–2070
DS 3-23	24	32	12	17	120–200 (150–250)	1	1.7/2.0	1.7	144 × 151 × 269	2360–2500
DS 4-12	20	25	10	13	95–160 (150–250)	1	1.2/1.4	1.2	169 × 175 × 161	1940–2000
DS 4-17	24	32	12	18	120–200 (150–250)	1	1.8/2.1	1.7	169 × 175 × 215	2400–2500
DS 4-23	30	*	14	22	120–200 (150–250)	1	2.3/2.7	2.3	169 × 175 × 269	2930–3120
DSH 3-23 TS	24	32	12	17	190–315 (150–250)	2	1.7/2.0	1.7	144 × 151 × 269	2500–2550
DSH 4-23 TS	30	*	14	22	240–400 (150–250)	2	2.3/2.7	2.3	169 × 175 × 269	3120–3170

	MINIMUM operating weight for the base machine (t)				Hydraulic flow (drums' rotation speed)	Hydraulic motors	Volume, ISO/SAE	Screening area	Dimensions (h × d × w)	Weight (without adapters and accessories)
	Excavator		Wheel loader							
	Density of material									
	0.9 t/m³	1.9 t/m³	0.9 t/m³	1.9 t/m³	L/min (rpm)	Pcs	m³	m²	cm	kg
DSB										
DSB 2-12	16	22	8	11	95–235 (65–150)	2	1.0/1.2	0.9	144 × 151 × 161	1740–1880
DSB 2-17	20	25	9	14	95–235 (65–150)	2	1.3/1.5	1.4	144 × 151 × 215	2180–2370
DSB 2-23	24	32	12	17	160–370 (65–150)	2	1.7/2.0	1.7	144 × 151 × 269	2730–2900
DSB 3-12	20	25	10	13	95–235 (65–150)	2	1.2/1.4	1.2	169 × 175 × 161	2210–2400
DSB 3-17	24	32	12	18	95–235 (65–150)	2	1.8/2.1	1.7	169 × 175 × 215	2780–3070
DSB 3-23	30	*	14	22	160–370 (65–150)	2	2.3/2.7	2.3	169 × 175 × 269	3460–3870
DH										
DH 3-12	18	23	8	11	140–235 (150–250)	2	1.0/1.2	0.9	145 × 153 × 161	1890–1940
DH 3-17	22	27	10	15	140–235 (150–250)	2	1.3/1.5	1.4	145 × 153 × 215	2330–2410
DH 3-23	26	35	14	18	140–235 (150–250)	2	1.7/2.0	1.7	145 × 153 × 269	2870–3010
DH 4-12	22	28	10	14	140–235 (150–250)	2	1.2/1.4	1.2	170 × 177 × 161	2240–2300
DH 4-17	27	36	14	19	140–235 (150–250)	2	1.8/2.1	1.7	170 × 177 × 215	2770–2870
DH 4-23	32	45	16	24	190–315 (150–250)	2	2.3/2.7	2.3	170 × 177 × 269	3370–3560
DH 4-27	36	*	18	27	240–400 (150–250)	2	2.9/3.4	2.8	170 × 177 × 315	4140–4450
DH 3-12 TS	18	23	8	11	190–315 (150–250)	2	1.0/1.2	0.9	145 × 153 × 161	1950–1970
DH 3-17 TS	22	27	10	15	190–315 (150–250)	2	1.3/1.5	1.4	145 × 153 × 215	2430–2450
DH 4-17 TS	27	36	14	19	190–315 (150–250)	2	1.8/2.1	1.7	170 × 177 × 215	2890–2930
DHB										
DHB 2-12	10	14	4	6	95–235 (65–150)	2	1.0/1.2	0.9	144 × 151 × 161	2020–2150
DHB 2-17	12	16	6	8	95–235 (65–150)	2	1.3/1.5	1.4	144 × 151 × 215	2520–2710
DHB 2-23	15	20	7	10	160–370 (65–150)	2	1.7/2.0	1.7	144 × 151 × 269	3150–3410
DHB 3-12	12	16	6	8	95–235 (65–150)	2	1.2/1.4	1.2	169 × 175 × 161	2520–2700
DHB 3-17	16	20	7	10	95–235 (65–150)	2	1.8/2.1	1.7	169 × 175 × 215	3150–3440
DHB 3-23	20	24	9	13	160–370 (65–150)	2	2.3/2.7	2.3	169 × 175 × 269	3910–4310

* Manufacturer's permission required

	Maximum allowed excavator weight	Maximum allowed wheel-loader weight
	t	t
DN/DNS series	28	14
DS/DSB series	35	22
DH/DHB series	45	30

Notes:

- The base machine's minimum weight recommendations are calculated without extra sides, with a 300 kg adapter installed and with material densities of 900 and 1900 kg/m^3.
- Check the actual tipping load from the technical specifications of the base machine. It can affect the recommendation considerably. Note that in use with a wheel loader, the tipping load must be around 50% higher than the total weight of the Screener crusher and the material, because the centre of gravity is higher and further back than when a standard bucket is used.
- The volume increases approximately 30% with extra sides.
- The Screener crusher weights specified in the table do not include accessories or adapters.
- Weights, dimensions, and values are approximate. The manufacturer may change the technical specifications without notice.

5.3 Hydraulic schematics

5.3.1 Connecting the Screener crusher with the base machine's hydraulic system

The schematic presentation below illustrates the attachment of the Screener crusher to the auxiliary hydraulic system of an excavator's base machine. This applies also to the attachment of the Screener crusher to a wheel loader.

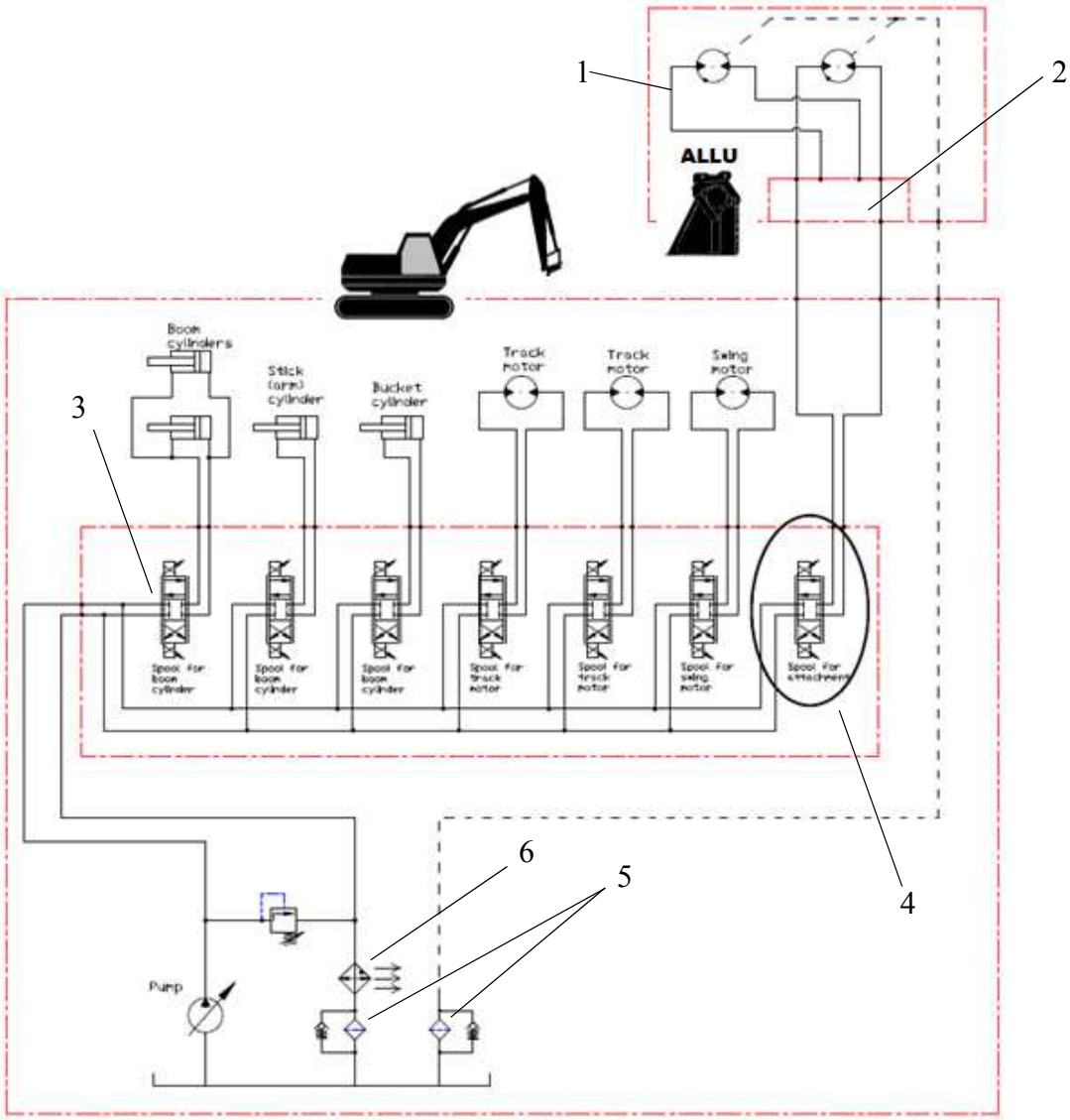

1. ALLU Screener crusher
2. The Screener crusher's power limiting valve
3. Excavator control valves
4. Excavator auxiliary hydraulic control valve
5. Return filter (the drain line may be connected to the tank via either a separate filter or the base machine's return filter)
6. Cooling system for hydraulic oil

5.3.2 Single-motor buckets

Power limiting valve:

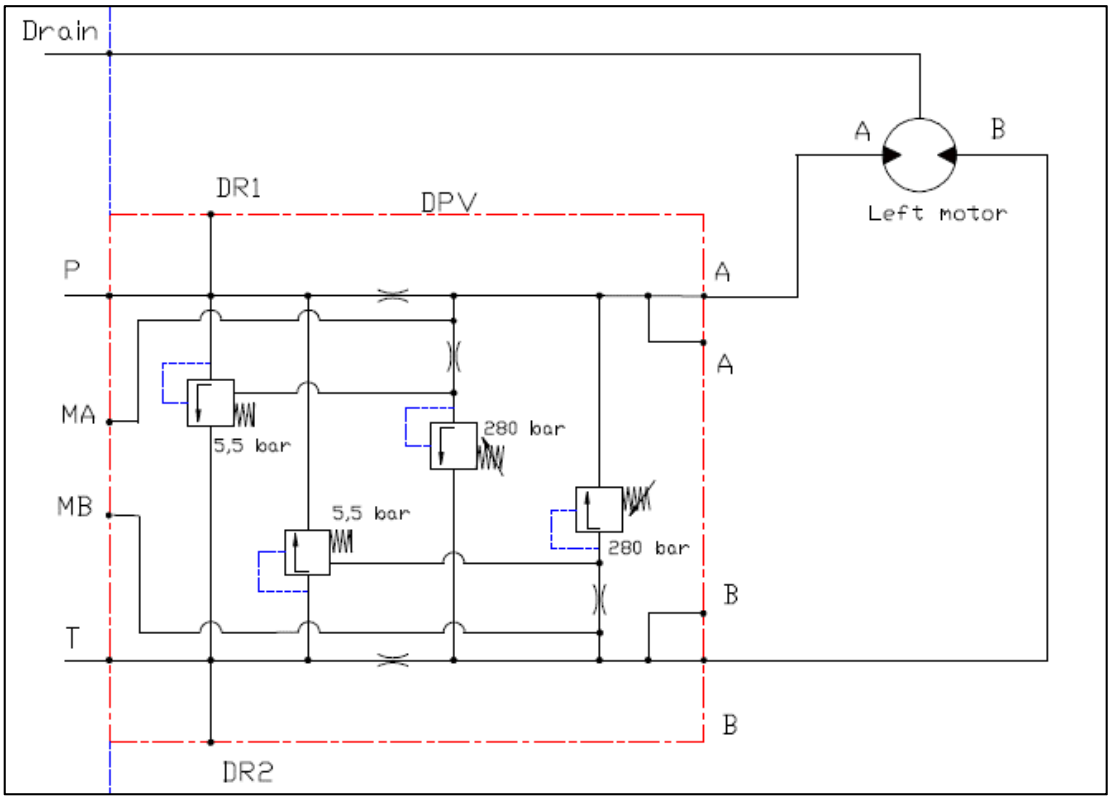

Power limiting valve and drain-line eliminator (accessory):

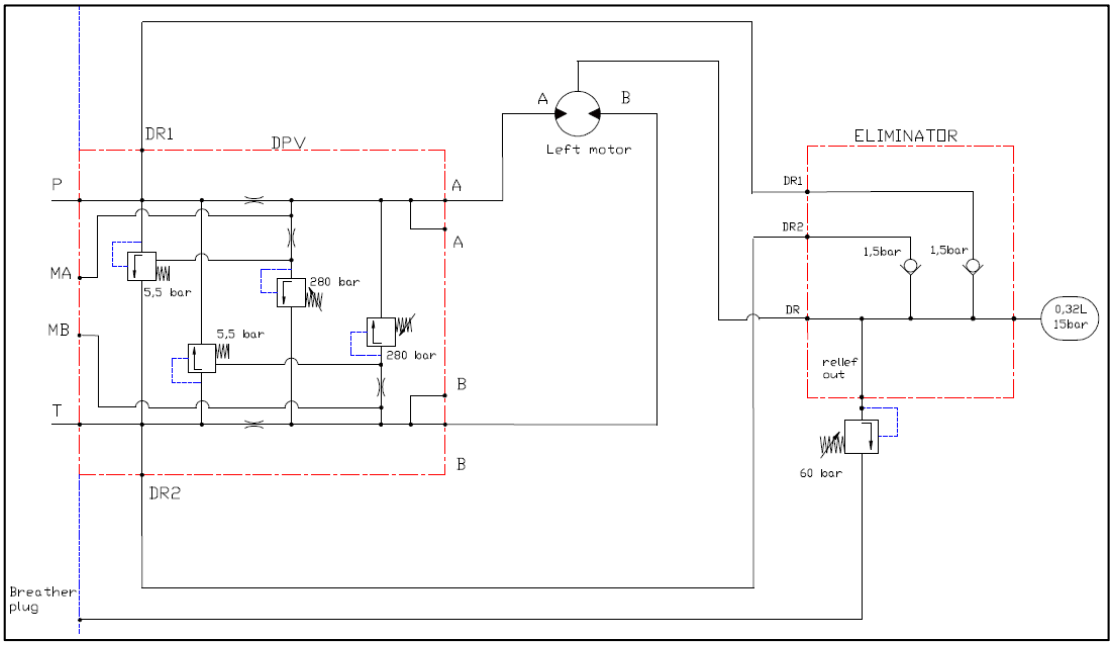

Power limiting valve and drain-line safety valve (accessory):

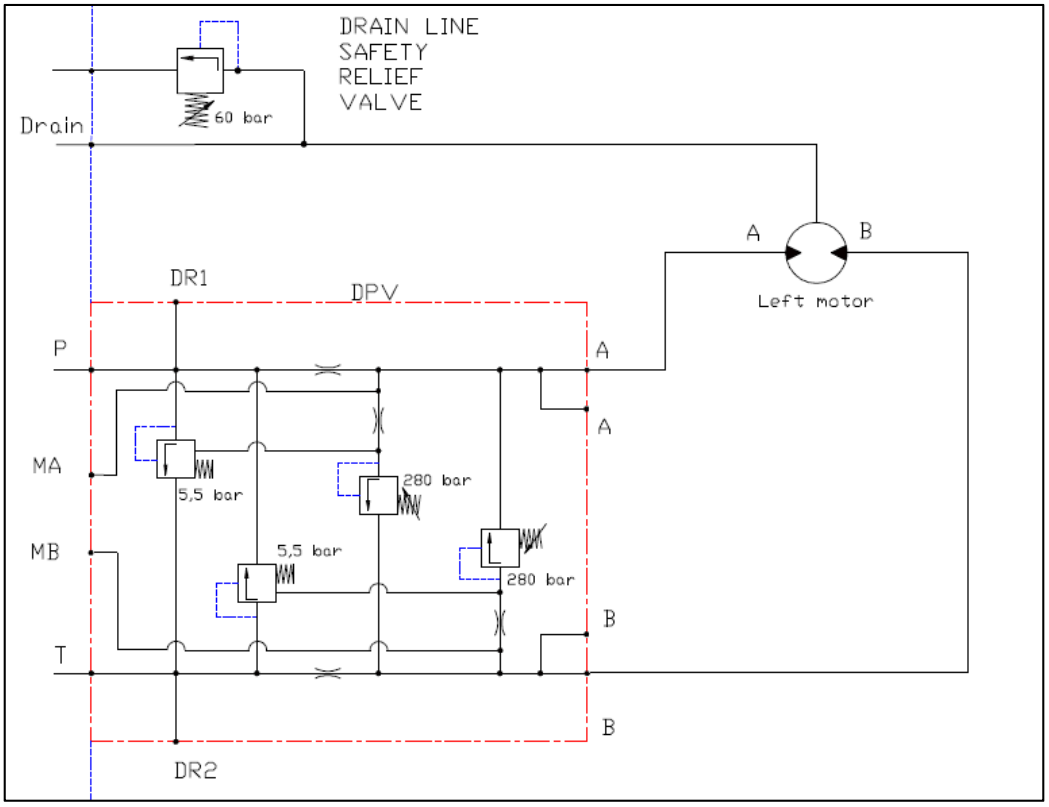

5.3.3 Two-motor buckets

Power limiting valve:

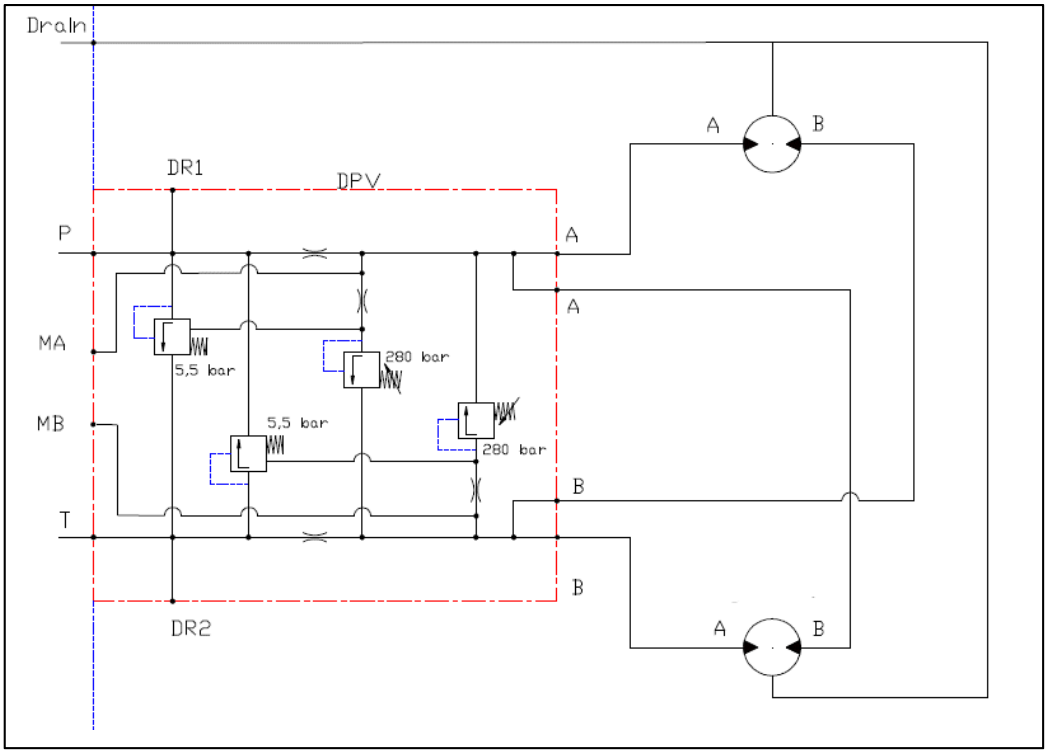

Power limiting valve and drain-line eliminator (accessory):

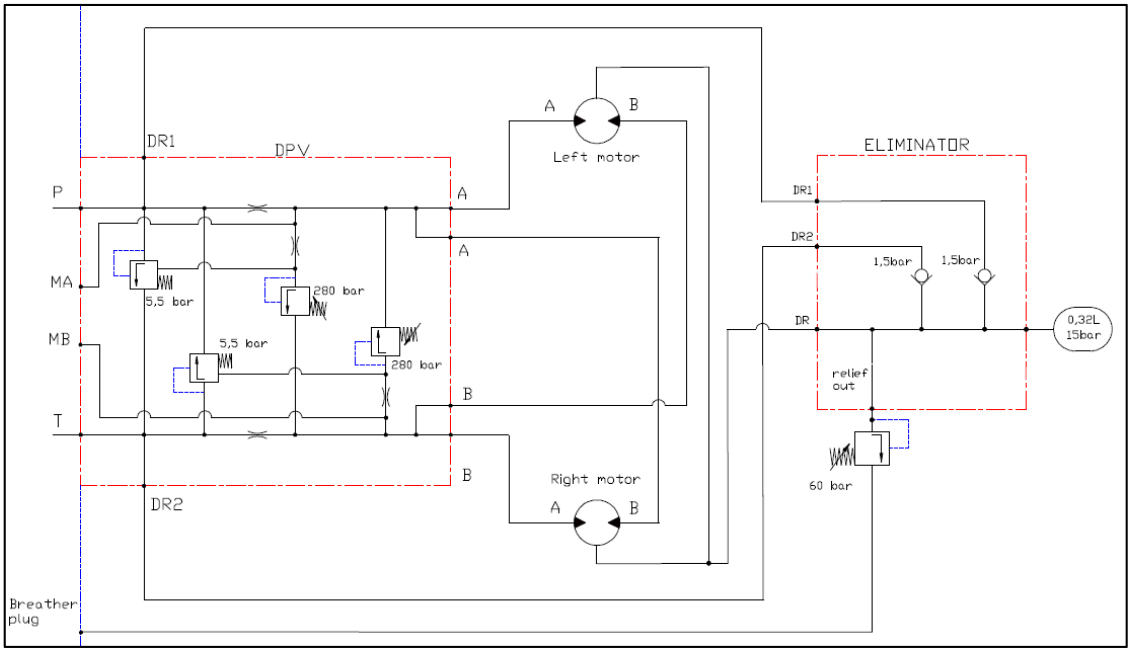

Power limiting valve and drain-line safety valve (accessory):

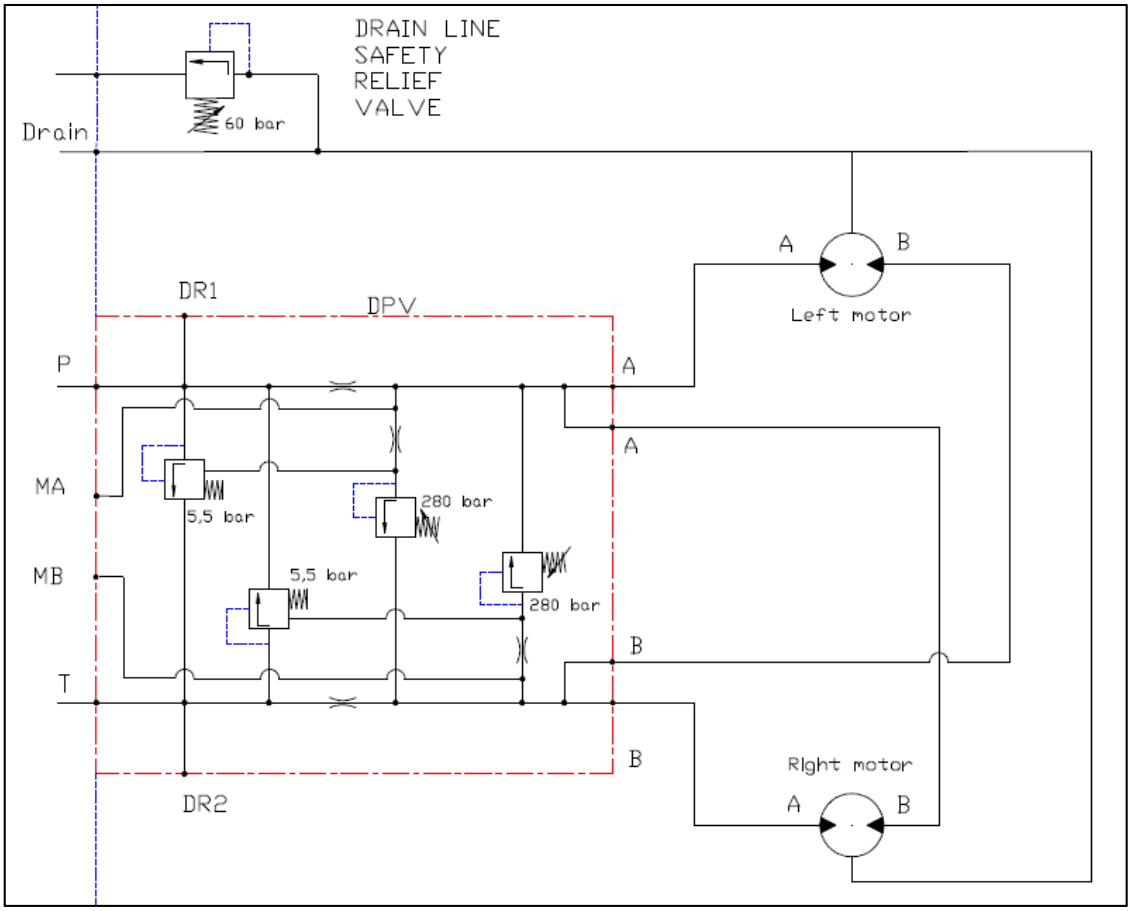

5.4 Noise level

The noise levels are as specified in DIN EN-ISO 3746 / DIN 45635-1 / DIN 45635-33, measured with the DN3-12 Screener crusher in the most typical applications.

Description	Distance *r* = 5 m		Distance *r* = 7.5 m		Distance *r* = 10 m		Distance *r* = 20 m	
	L_{pa} [dB(A)]	$L_{pC,\ peak}$ [dB(C)]	L_{pa} [dB(A)]	$L_{pC,\ peak}$ [dB(C)]	L_{pa} [dB(A)]	$L_{pC,\ peak}$ [dB(C)]	L_{pa} [dB(A)]	$L_{pC,\ peak}$ [dB(C)]
Separating demolition waste	90	114	87	111	84	109	79	103
Separating the rock/soil mixture	85	110	81	107	79	105	73	99
Separating top soil	77	107	74	103	71	101	66	95

Description	$L_{pAm,2m}$ 1) [dB(A)]	$L_{pC,peak,2m}$ 2) [dB(C)]	**L_{WA} 3) [dB(A)]**	**$L_{WA,max}$ 4) [dB(A)]**	K_I 5) [dB]	K_T 6) [dB]	σ 7) [dB]
Separating demolition waste	96.3	120.6	**112.9**	**115.4**	9.9	--	1.7
Separating the rock/soil mixture	91	116.8	**107.6**	**109.9**	4.3	--	1.4
Separating top soil	83.3	113.1	**99.9**	**104**	5.5	--	2.3
Background noise from mobile excavator	67.6	90.8	**84.2**	**86.5**	0.9	--	2.2

1) Average sound pressure level, measured at 2 m distance, averaged over all measurement points
2) Peak sound pressure level, measured at 2 m distance
3) Sound power level
4) Sound power level at the maximum sound pressure level
5) Addition for the impulse of the measured sound pressure level
6) Addition for the tonality of the measured sound pressure level