B45D 6x6 ARTICULATED HAULER

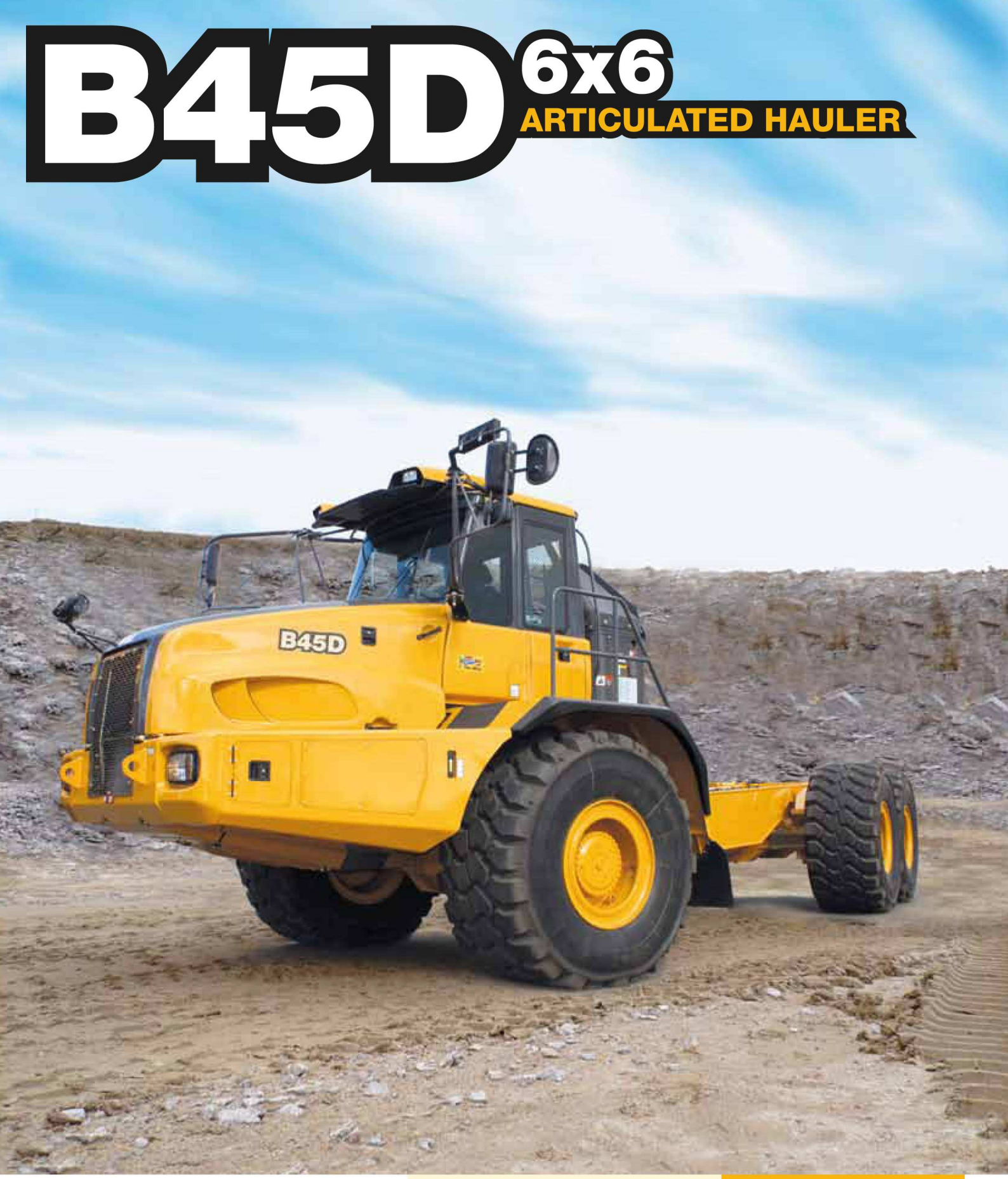

PROUDLY SOUTH AFRICAN

- Gross Power: 375 kW
- Gross Torque: 2 400 Nm
- Gross Combined Mass: 120 000 kg

BELL

Courtesy of Machine.Market

B45D 6x6 ARTICULATED HAULER

STANDARD EQUIPMENT

Body

- Jost 37C fifth wheel hitch
- Standard Bell dia 90 ball hitch fitted on rear plate
- Increased departure angle
- Trailer brake kit, integrated with EVB
- 2 x Fire extinguishers fitted to mudguard

APPLICATIONS

- Rough terrain lowbed trailer hauler
- Jinker trailer
- Scraper tractor

OPERATING WEIGHTS

Laden:	Front	21 190 kg
	Middle	26 410 kg
	Rear	26 380 kg
	Total	73 980 kg
Max load transfer		46 000 kg

LINE DRAWINGS

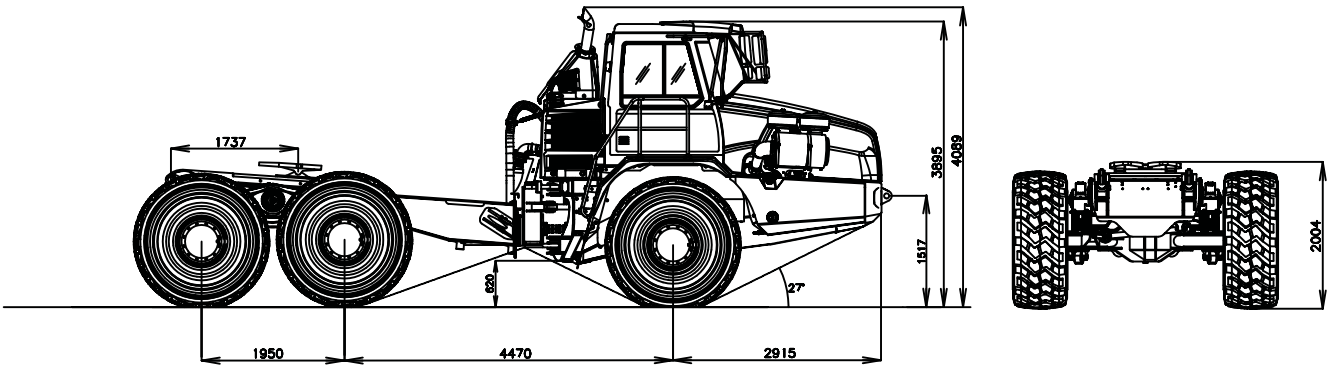

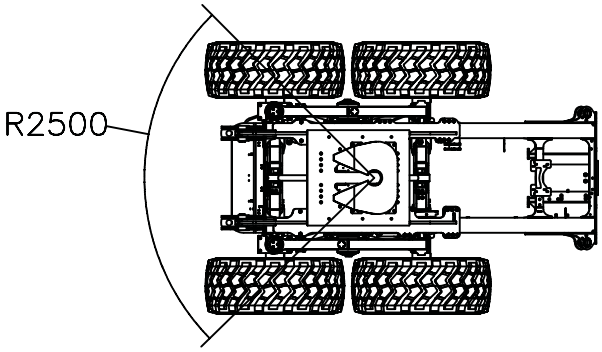

BELL INTERNATIONAL : Tel: +27 (0) 35 907 9431

Tel: +27 11 928 9700
Tel: +49 6631 911 30
Tel: +33 555 89 23 56
Tel: +34 918 796 019
Tel: +7 495 647 20 90
Tel: +44 1283 712 862

E-mail: sales@bellequipment.com • **www.bellequipment.com**

All dimensions are shown in millimetres, unless otherwise stated between brackets. Under our policy of continuous improvement, we reserve the right to change specifications and design without prior notice. Photographs featured in this brochure may include optional equipment.

Strong Reliable Machines
Strong Reliable Support

BELL

SPEC/1213/07/12 - B45D Articulated Hauler

Courtesy of Machine.Market