Member of CISQ Federation
RINA
ISO 9001:2000
Certified Quality System

Hinowa

MANUAL USE
AND MAINTENANCE

MINIDUMPER MODEL HP1100

MUHP110020404

Contents

Mod. P05MD8 R02
Del 19/11/02

Hinowa

MINIESCAVATORI - MINIDUMPERS - CARRI CINGOLATI - PIATTAFORME AEREE - PALE COMPATTE

DICHIARAZIONE DI CONFORMITA' CE
EG CONFORMITY DECLARATION

LA SOCIETA' **HINOWA S.p.A.** CON SEDE IN VIA FONTANA
THE COMPANY HINOWA S.p.A. MAIN OFFICE IN VIA FONTANA
37054 NOGARA (VR) ITALIA.
37054 NOGARA (VR)

DICHIARA
DECLARES

SOTTO LA PROPRIA ESCLUSIVA RESPONSABILITÀ CHE IL PRODOTTO DENOMINATO
ON ITS OWN EXCLUSIVE RESPONSIBILITY THAT THE PRODUCT CALLED

"MINIDUMPER "

DESTINATO AD UTILIZZO MOVIMENTO TERRA
DESTINED FOR GROUND MOVING PURPOSES

MODELLO :
MODEL
MATRICOLA :
SERIAL NUMBER
ANNO DI COSTRUZ. :
CONSTRUCTION YEAR

AL QUALE QUESTA DICHIARAZIONE SI RIFERISCE, E' CONFORME AI REQUISITI ESSENZIALI DI SICUREZZA PREVISTI DALLE DIRETTIVE 98/37 CE, 89/336 , E SUCCESSIVE MODIFICHE.

TO WHICH THIS DECLARATION REFERS,COMPLIES WITH THE ESSENTIAL SAFETY REQUIREMENTS PROVIDED FOR BY DIRECTIVES 98/37, 89/336, AND SUBSEQUENT MODIFICATIONS.

Il Legale Rappresentante
Fracca Benito

Fracca Benito

HINOWA s.p.a. - Via Fontana - 37054 NOGARA (Verona) - ITALIA - Tel. 0442 539100 - 539106 - Telefax 0442 539075 - E-mail: hinowa@hinowa.it
web site: www.hinowa.com - Reg. Imp. C.C.I.A.A. VR001-26003 - R.E.A. 210602 - Cod. Fisc. e Part. Iva 01996640239 - Cap. Soc. € 258.000,00 i.v.

INTRODUCTION

Dear customer,

First of all, thank you for choosing a Hinowa ***Minidumper HP1100*** *and we hope that you will be satisfied by your recent purchase.*
You have now a working instrument you can rely on as long as you follow the operating and maintenance instructions.

Carefully read this manual before starting, operating, maintaining, refuelling or doing any other operations on the machine.

We always have safety in mind when designing and manufacturing our machines. Unfortunately, our effort is void when the machine is not operated safely.
Preventing accidents is also connected to paying attention, being careful and to have properly trained people operating, transporting and maintaining the equipment.
Among the operator's responsibilities is to read and understand all the safety instructions given in this manual and to apply them strictly.
Only allow properly trained staff to operate the minidumper. Working with equipment of which you ignore the technical specifications can cause errors with subsequent danger to health and safety. In order to acquire all the necessary preparation, read carefully this manual before starting the machine. In any case the owner's responsibility (even if the machine is lent or hired) is to make sure that, before starting work, all operators read and understand this operator's manual and are properly trained to operate this equipment.
This manual is part of the machine and must be always kept with it.
Our machines are constantly been improved and could therefore show characteristics different from the ones shown in this manual; contact your Hinowa dealer to have updated information.
Do not hesitate to contact your Hinowa dealer for all useful information or repair; he is always informed on the best way to operate your machine and will advise you on suitable equipment. He will also supply you with original spare parts, which is the only guarantee of quality and perfect replacement. When ordering parts, please specify the machine serial number if you want to make sure to get the right parts.

Good work with Hinowa!

MINI-DUMPER IDENTIFICATION DATA

A) "CE" PLATE PLACE AND MARK

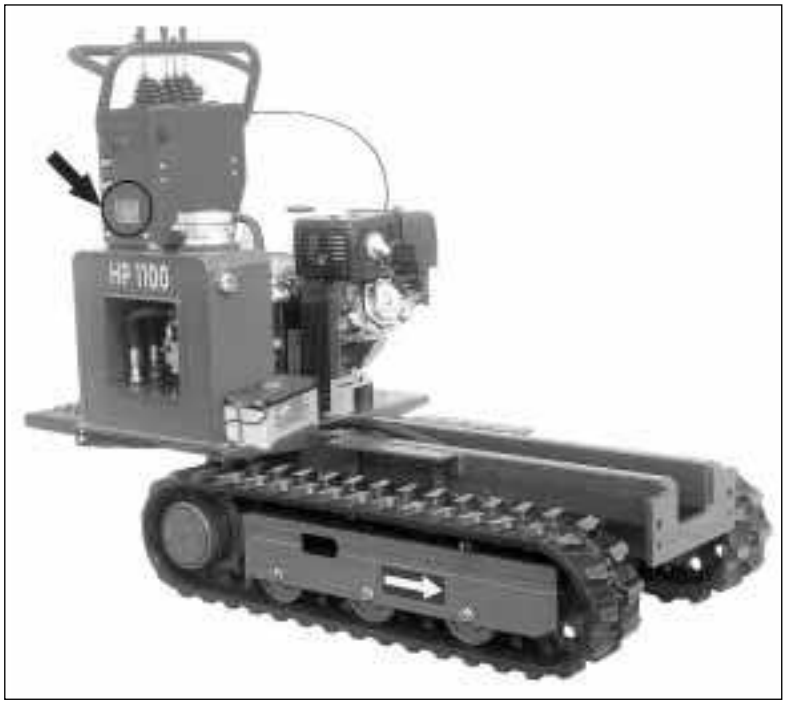

B) POSITION OF IDENTIFICATION PLATES OF MACHINE PARTS

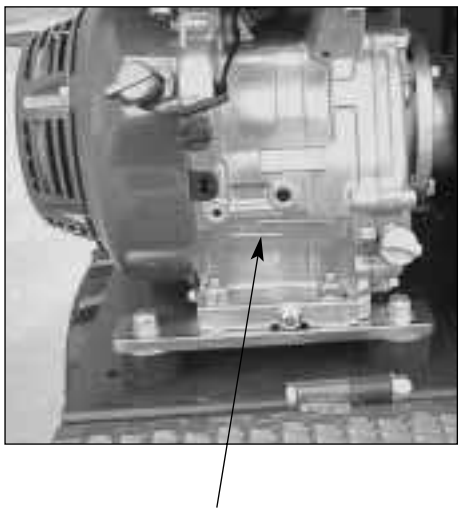

ENGINE SERIAL NUMBER

CLASSIFICATION

HP1100 / *

Minidumper type

Minidumper model

TERMINOLOGY

To help you understand all the safety and instruction warnings as well as the operating and maintenance instructions of the minidumper HP 1100, you will find below the names of the machine various parts:

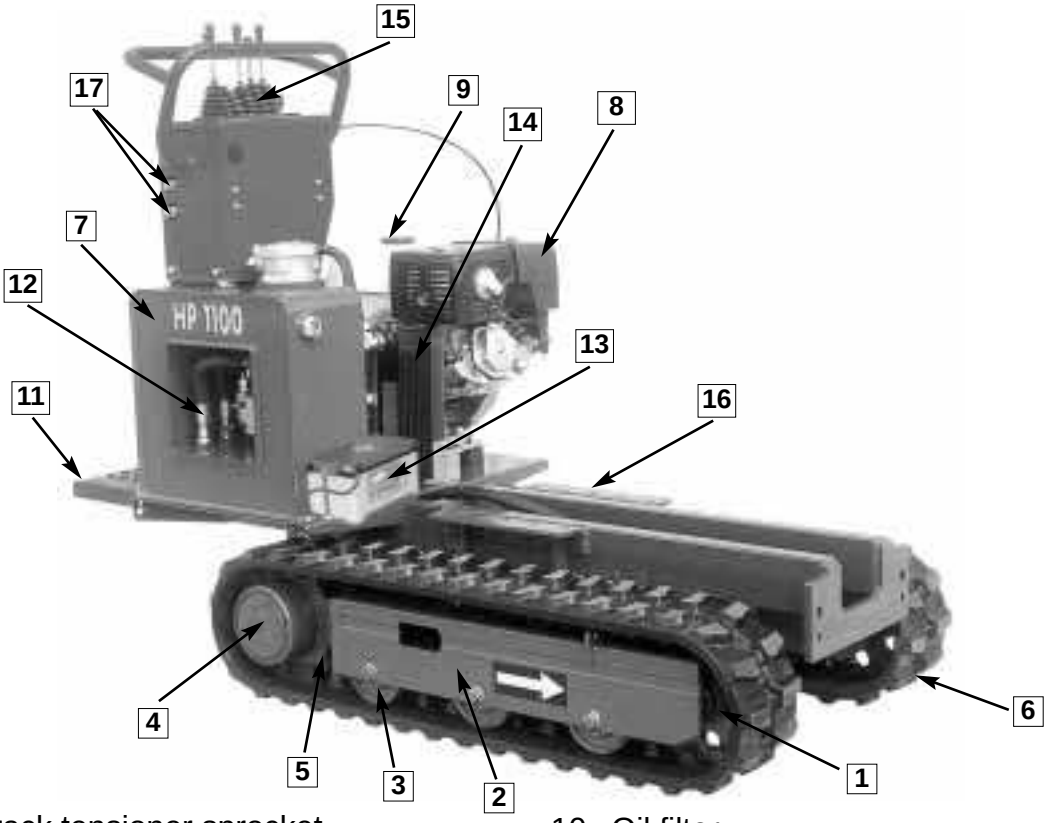

1 Track tensioner sprocket
2 Rubber crawler frame
3 Roller
4 Traction reduction unit
5 Sprocket
6 Rubber track
7 Hydraulic oil tank
8 Engine
9 Fuel tank
10 Oil filter
11 Footboard
12 Hydraulic pump
13 Battery
14 Heat - exchanger
15 Hydraulic distributor
16 Flanges for special equipment
17 Hydraulic auxiliary plugs

SAFETY INFORMATIONS

Before starting work and before any maintenance jobs, read, understand and follow all the precautions and warning given in this manual to avoid any accidents.

This is a safety-warning signal.
Take care when you see this signal on the machine or in the manual, as there is a potential danger of bodily injury.
Take the necessary precautions and follow safe operating procedure.

Words **DANGER** and **WARNING** are used along with this safety signal.
The word danger indicates the most serious risks, which could cause serious injuries or even death if danger is not avoided.
It can also cause damage to the machine.

DANGER

The word ATTENTION indicates possible dangerous situations, which could cause light injury or harm to people. This wording can also be used only in case of possible damage to the machine

WARNING

This message is used in case of situations, if not avoided, could shorten the life of the machine

IMPORTANT

Hinowa Company cannot foresee all possible dangerous circumstances when operating or maintaining the machine.
If all the instructions and operations allowed for this machine are followed, you can be sure that the operator and the people nearby can operate safely and without any risk of damaging the machine.
Please contact us in case of doubt about safety procedures.

PICTOGRAMS

CONSULT THE MANUAL

Carefully read the contents of this manual before starting, operating, doing maintenance jobs, refuelling or other operations on the machine.

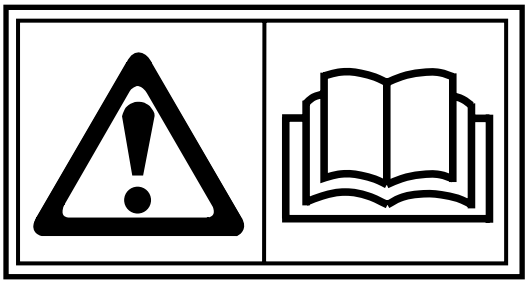

DANGER WORKING AREA

Never stay close or within the working area of the machine equipment.

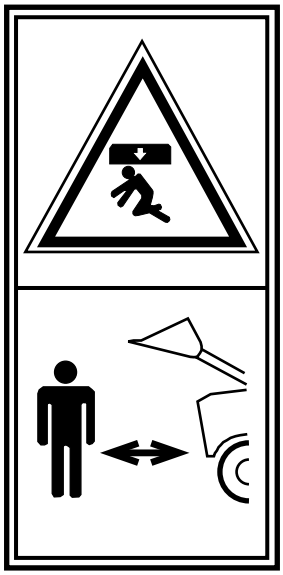

HYDRAULIC OIL FILTER

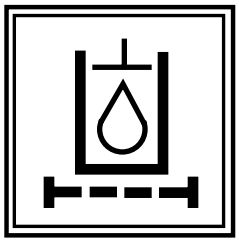

HYDRAULIC OIL LEVEL

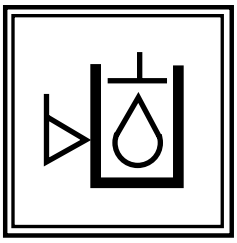

HYDRAULIC OIL

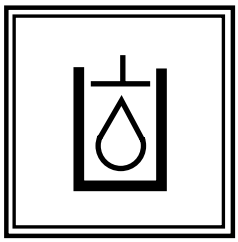

FUEL

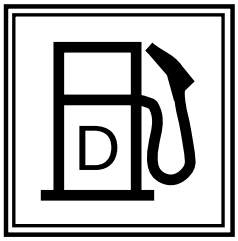

LIFTING POINTS

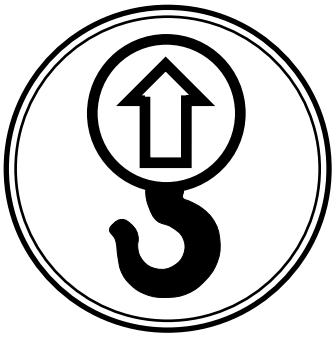

SAFETY AND ACCIDENT PREVENTION

1 GENERAL WARNING ⚠ DANGER

1.1 Read the instructions carefully

Before doing any types of operations on the machine, follow all the safety rules, warnings and instructions given in this manual.

1.2 Follow safety instructions

Read the meaning of all safety warnings in this manual and the safety signals on the machine.
Check that all the safety signs are in proper working order, replacing the missing or damaged ones.
Make sure that new equipment bear correct signs when replacing new parts or tools.
Learn the proper way of operating the machine and the controls.
Never allow unauthorised and not properly trained people to operate the machine or/and do maintenance jobs on it.

1.3 Clothing and protective wear

Avoid wearing loose clothes, rings, watches or anything that could get entangled inside the rotating parts. Do not wear clothes stained with oil or fuel, as they can be flammable.
When operating the machine or doing maintenance jobs, wear a helmet, safety glasses and safety shoes, a mask, gloves and noise protection earmuffs.
When working for more than 8 hours with a 90 dBA acoustic level it is absolutely necessary to wear protective earmuffs.

1.4 Unauthorised alterations

It is absolutely forbidden to do any alterations on the machine, which could damage its working and its safety. Hinowa declines any responsibility for injury or damage caused by unauthorised alterations.

1.5 Safety valves

Never alter or/and tamper with the safety valves and the controls in the hydraulic system.
Hinowa declines any responsibility for injury to people, damage to things and to the machine if the hydraulic valve standard gauging has been tampered with.

OPERATING PRECAUTIONS

2 PRECAUTIONS TO TAKE BEFORE STARTING THE ENGINE

DANGER

2.1 Safety in the working area

Before starting the engine, carefully check the conditions of the working ground to find out any possible irregularities, which might make working dangerous.
Always take care of people entering within the working range of the machine. Always warn people before moving the machine.

2.2 Fire prevention

Keep the engine compartment clean; remove any pieces of wood, paper and other flammable products; clean properly any fuel, oil or flammable fluid leaks, as they can be potential fire risks.
Petrol is extremely flammable and explosive under certain conditions. Refuel in a well-ventilated place and when the engine is off.
Never smoke or cause sparks in the refuelling place or the fuel storage place.
Never fill the tank too much. After refuelling, make sure that the cap is closed safely and properly.
Make sure there is no fuel leak when refuelling. Petrol fumes or possible leaks might catch fire.
Make sure the area is dry before starting the engine.
The exhaust pipe gets overheated during work and remains hot even after the engine has been turned off. Take care not to touch the exhaust pipe when it is hot. To avoid burns, cool the engine before moving the carriage or starting it.

2.3 Warning against exhaust fumes

When working inside a building, make sure there is proper ventilation. If you are not sure about ventilation, use an extension to evacuate exhaust fumes.
Exhaust fumes can cause death.

3 MEASURES TO TAKE WHEN WORKING

DANGER

3.1 Precautions when starting the engine

Before starting the machine, check it properly by walking around it.
Warn people nearby that you are starting the machine. Do not allow anyone to climb onto the machine.

3.2 Precautions when driving

In order to avoid possible accidents or loss of control, never climb onto the carriage; place yourself behind it and hold the handle firmly. To avoid any possible injury from the machine, keep children and animals away from working area.
NEVER OPERATE THE MINIDUMPER AT NIGHT.

3.3 Precautions when transporting loads

To avoid accidents or tipping over, follow the loads restrictions indicated on p.40
Make sure the load is properly secured and does not exceed the dimensions of the carriage or obstruct the operator's view.
To avoid overturning, never change directions with the transporting carriage when operating on slopes. Never operate the carriage on upwards slopes with an over 25° slant and on downwards slopes with an over 25° slant.
Take care when reversing with the carriage, as there is an increased risk of falling and skidding.
On steep downward slopes, always operate at minimum speed. Never reverse on downward slopes.

3.4 Transporting the machine

Observe local regulations when transporting the machine on public roads.
Use a lorry or a trailer suitable for transporting the machine.
Always load or unload the machine on a flat or solid surface.

Always use a ramp or a loading platform when loading or unloading the machine.
Never use high-speed gears.
Avoid steering when driving up or down a ramp as it could be very dangerous. If steering is absolutely necessary, first go back to the ground or the flatbed, change direction and then start driving again.
Never operate any levers except the drive lever when driving up or down a ramp, this is to avoid unbalancing the machine. There is a bump at the top of the ramp. Take care when crossing it.
Fix chains and cables to the machine frame.

3.5 Parking the machine safely

Park the machine on a flat and solid surface with enough space for controlling. If you have to park on a slope, put safety blocks under rubber tracks.

3.6 Be prepared in case of emergency

Be prepared in case of fire.
Keep handy a first aid kit and a fire extinguisher.
Keep emergency numbers for doctors, ambulance, hospital and fire brigade near the telephone.

3.7 Wear protective garments

Wear tight fitting garments and safety equipment appropriate to the job you are doing.

3.8 Protect yourselves against noise

Prolonged exposure to loud noise can cause ear damage or loss of hearing.
Wear a suitable noise protection device such as earplugs or earmuffs to protect you against deafening or loud noises.

4 OPERATING INSTRUCTIONS

4.1 Driver's seat and controls – standard version

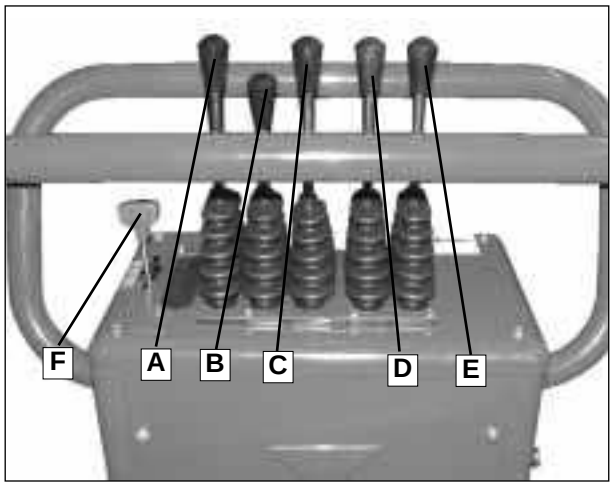

GASOLINE ENGINE VERSION

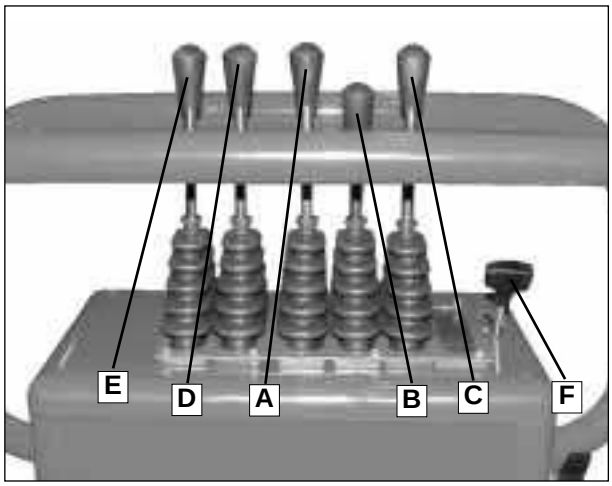

DIESEL ENGINE VERSION

A - Control joystick– carriage left shift
B - Control joystick – dumper tipping
C - Control joystick – carriage right shift
D - Clutch joystick – 2nd shift speed
E - Control joystick – accessory
F - Accelerator joystick

4.2 Driver's seat and controls – extensible version

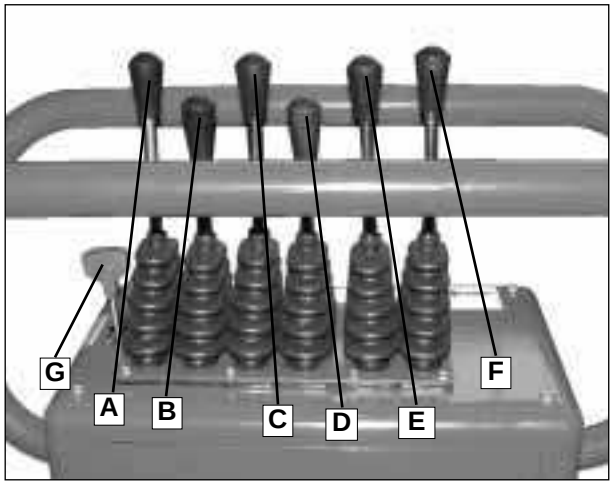

GASOLINE ENGINE VERSION

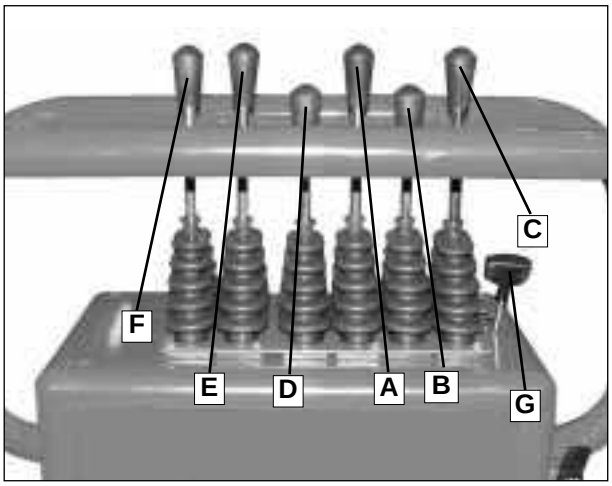

DIESEL ENGINE VERSION

A - Control joystick– carriage left shift
B - Control joystick – dumper tipping
C - Control joystick – carriage right shift
D - Control joystick - extension
E - Clutch joystick – 2nd speed
F - Control joystick – accessory
G - Accelerator joystick

4.3 GASOLINE ENGINE CONTROLS
(Consult also the engine operator's manual)

4.3.1 Starting the engine

1. Position the fuel valve to ON.

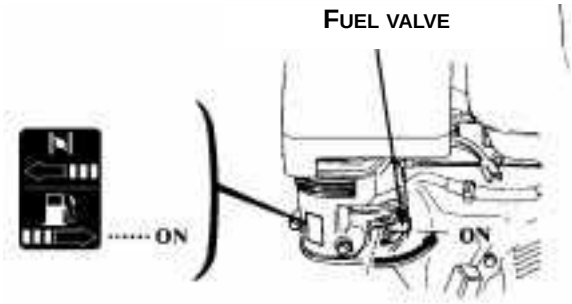

2. Position the air lever to CLOSE.

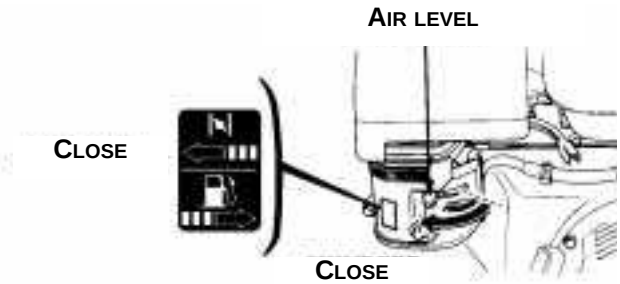

NB: Never use the air lever when the engine is hot and the air temperature is rather high.

4.3.2 Using the engine

1. As the engine gets warmer, gradually position the air lever to OPEN.

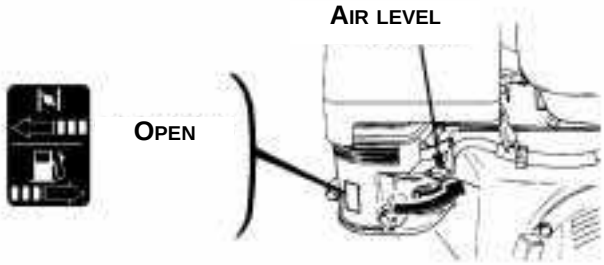

2. Position the acceleration control lever to obtain the desired rpm.

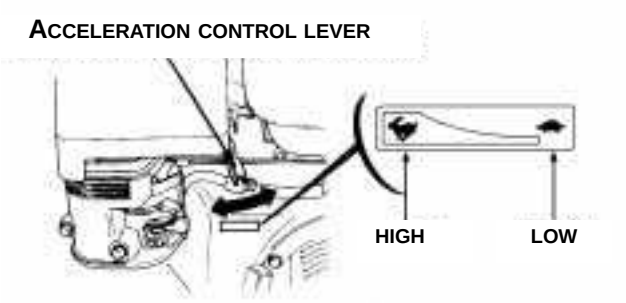

Oil alarm system (optional)

The oil alarm system is designed to prevent damages to the engine, as a result of lack of oil in the sump. Before the oil level drops below the minimum level, the alarm system stops the engine automatically. The engine switch remains in ON position.

NB:
If the engine stops and does not start again, check the oil level in the engine before checking any other parts.

Circuit switch

The circuit switch protects the battery recharging circuit. A short circuit or a wrongly connected battery will make it suddenly trip.
In this case, before disconnecting the circuit switch, find the origin of the trouble and put it right.
To disconnect the circuit switch, press CIRCUIT BREAKER button.

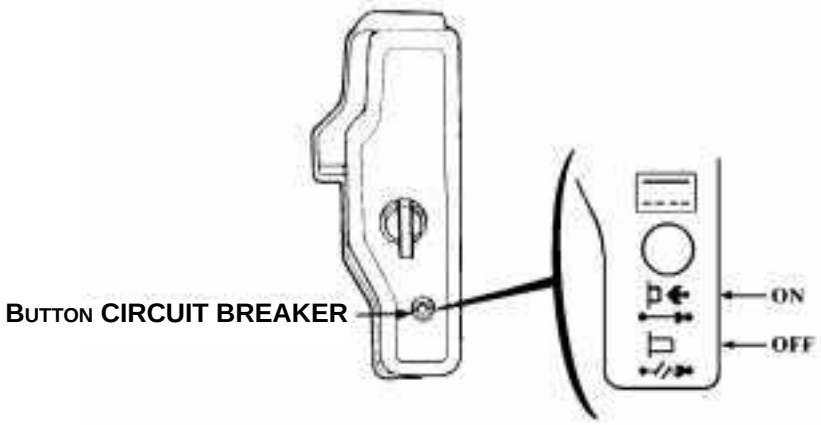

4.3.3 Stopping the engine

To stop the engine in an emergency, position the engine switch to OFF. In ordinary conditions, proceed as follows:

1. Position the accelerator control completely to the right.

ACCELERATION CONTROL LEVER

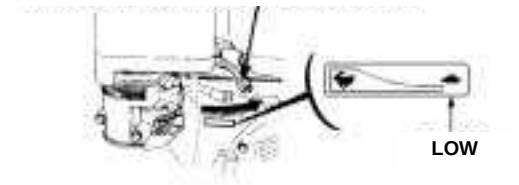

2. Position the engine switch to OFF.

ENGINE SWITCH

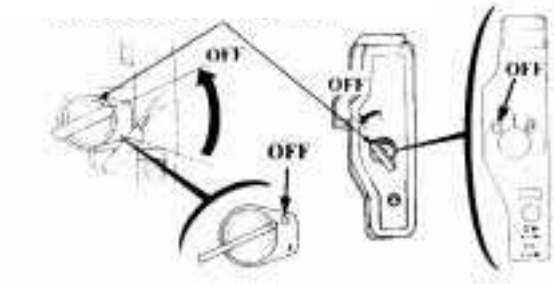

3. Position fuel cap to OFF.

FUEL CAP

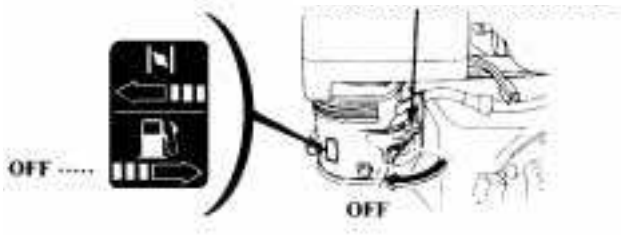

4.4 DIESEL ENGINE CONTROLS (See also the “User Manual” of the engine)

4.4.1 Motor Start

4.4.1.1 MANUAL START TROUGH SELF-WINDING SYSTEM

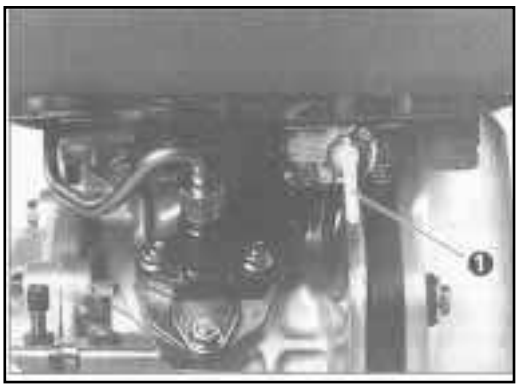

In order to start the engine please operate this way:

1. Position the fuel cock on “O” (= open);

2. Position the acceleration lever to “START”;

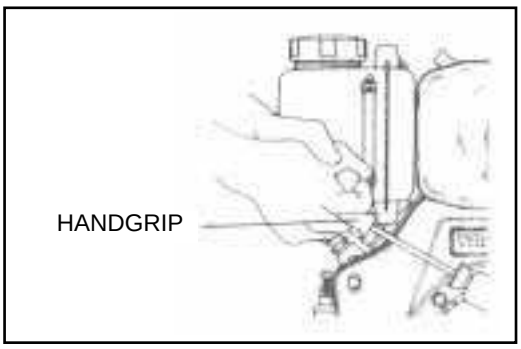

3. Pull out the handgrip of the self-winding system as follows:

   a) Pull out the handgrip until you feel a strong resistance. Then pull it in again to the initial position.

   b) Pull down the decompression lever. It will enter automatically by the pulling out of the self-winding system.

   c) Pull with strength with both hands the handgrip of the self-winding system .

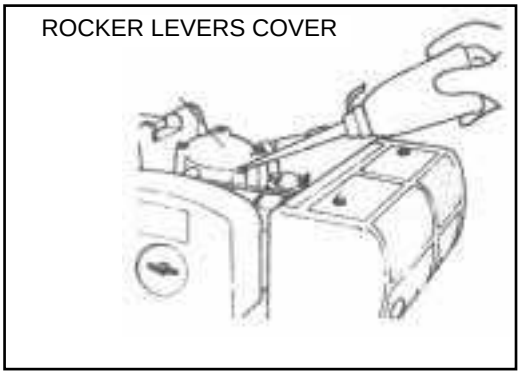

CAUTION

In order to avoid damages to the self-winding system, do not leave the handgrip suddenly but let it softly return to the initial position.

IMPORTANT:

To the engine start by low temperatures do never use additives such as gasoline, ether for paints, gases or other volatile fluids, as they would seriously damage the engine.

CAUTION

Keep always the rubber cap closed except when you have to pour in oil. In fact, when the cap is not on, some impurities, rain or other contaminating substances could enter the motor and cause its quick wear.

4.4.1.2 ELECTRICAL START

1. **Engine start**
   (all preparations for the electrical start are exactly the same as for the manual start)

   a) Open the fuel cock;

   b) Position the acceleration lever to “START”;

   c) Turn the engine start key to the position “START”;

   d) Leave the key as soon as the engine has started;

   e) If the engine does not start after 10 seconds, wait a little bit (15 seconds roughly) before trying again.

   CAUTION

   If the starting motor remains switched on too long, the battery gets unloaded and the starter itself can block. While translation movement keep always the key on position “ON”.

1. **Battery**

Check at least monthly the electrolyte level. When the minimum level is reached then pour in distilled water up to maximum level.

CAUTION

If the electrolyte level is too low, the engine cannot start. Keep always the electrolyte level between maximum and minimum limit.
By a too high level the electrolyte can go out and corrode any adjacent part.

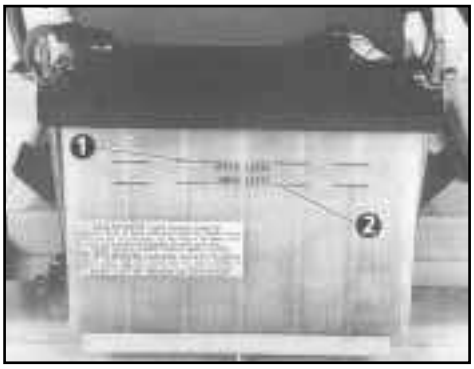

1.MAXIMUM LEVEL 2.MINIMUM LEVEL

4.4.2 Motor functioning

4.4.2.1 MOTOR FUNCTIONING

Warm up the engine more or less 3 minutes long.

CAUTION

Do not unloose or adjust the speed limiting screw and the limiting screw of fuel ignition, as by so doing you could negatively affect the motor efficiency.

4.4.2.2 CHECKS TO BE DONE WHILE THE MOTOR IS WORKING

1. Is there any strange noise or vibration?
2. Does the motor turn “roughly” or is there any burst in it?
3. Does the exhaust gas have a particular colour (black or white)?

In case you find one of this problems, please contact one of the Yanmar distributors.

IMPORTANT

Do not touch the exhaust muffler during the motor functioning or immediate after it has stopped, as the temperature of the muffler is very high. Never fuel while the motor is on.

4.4.3 Motor stop

1. Before stopping the motor set the acceleration lever to the position of minimum speed and then let the motor idle for 3 minutes.
2. Set the lever to the position “STOP”.
3. In case you have a motor with electrical start, turn the start key to the position “OFF” (motor stop).
4. Turn the fuel cock to the position “S” (closed).
5. Pull slowly the handgrip of the self-winding system out until you feel a strongest resistance (compression phase) and let it in this position. This will avoid rust formation when motor is standstill.

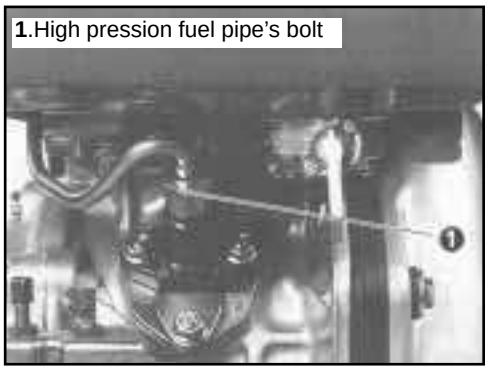

1.High pression fuel pipe’s bolt

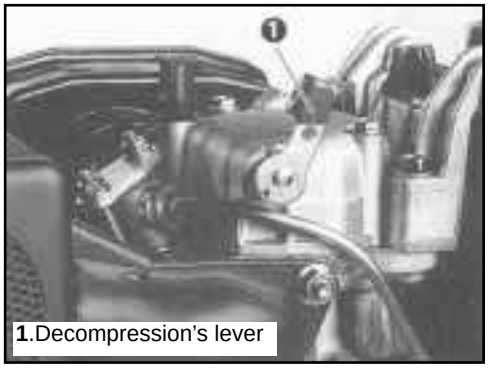

1.Decompression’s lever

IMPORTANT:

If the motor goes on working when the lever is on the position “STOP”, stop the motor by closing the fuel cock (position “S”) or by unloosing the nut of the high pressure pipes on the ignition pump.

CAUTION

Reduce gradually the load on the motor before stopping it . In fact, by arresting it suddenly you could extraordinary increase its temperature.

Do not stop the motor by using the decompression lever.

4.5 MOVING THE MACHINE

4.5.1 OPERATING THE UNDERCARRIAGE – STANDARD VERSION

GASOLINE ENGINE VERSION DIESEL ENGINE VERSION

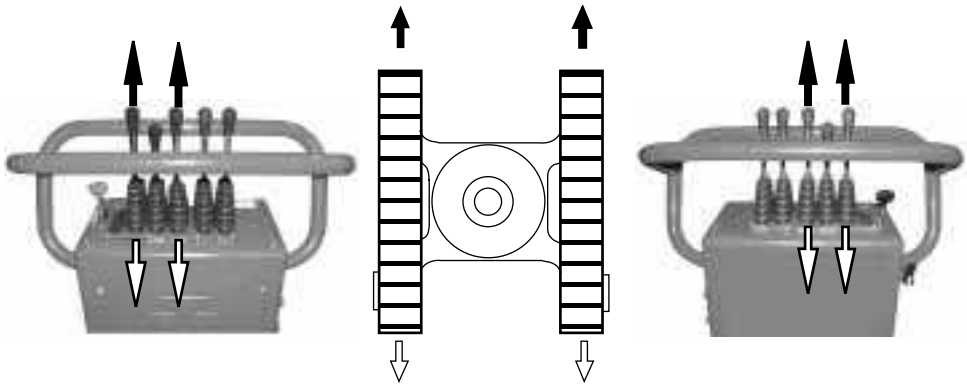

- *Straightforward translation*
  Move both levers forward to go straightforward
  Pull both levers backward to go reverse

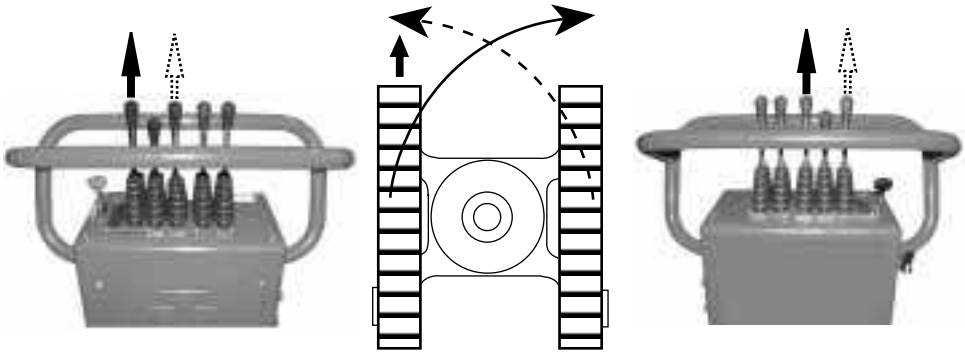

- *Right or left steering*
  To steer right, push left lever forward
  To steer left, push right lever forward

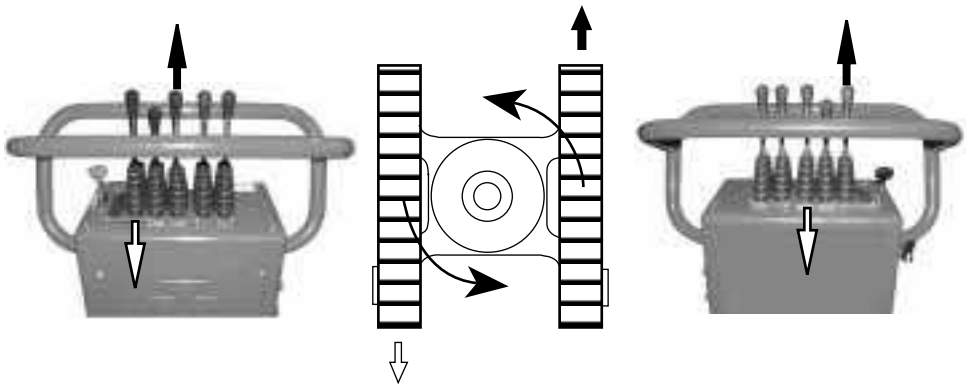

- *Steering on axle*
  Push one lever forward and the other backward

4.5.1.1 Operating hydraulic tilting

Operating the lever as indicated in the picture allows the hydraulic tilting of the flat bed.

GASOLINE ENGINE VERSION DIESEL ENGINE VERSION

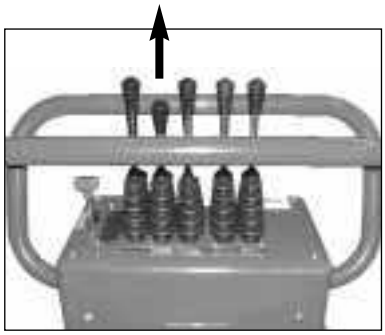
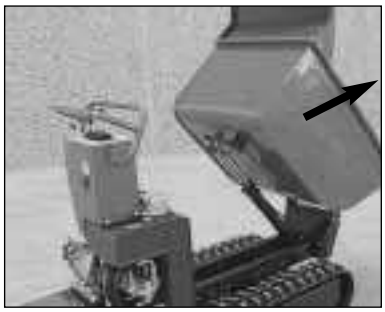
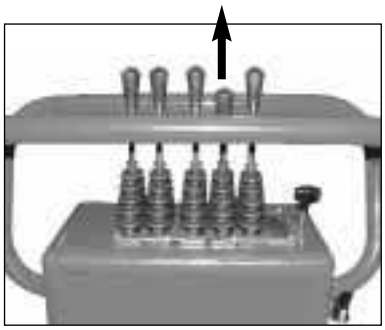

4.5.1.2 Operating the 2nd translation speed

To operate the undercarriage 2nd translation speed, move lever as indicated. Operate this control only when the translation is done on a flat surface.

GASOLINE ENGINE VERSION DIESEL ENGINE VERSION

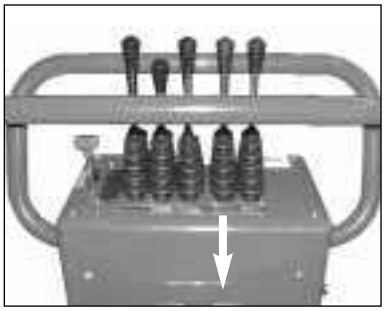
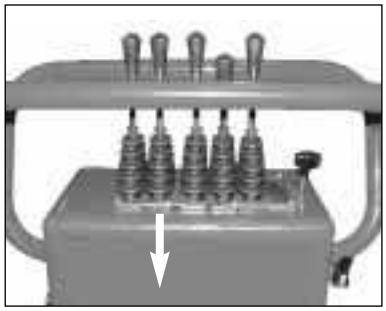

4.5.1.3 Optional control lever

The optional control lever will be only used in case an accessory kit is mounted.

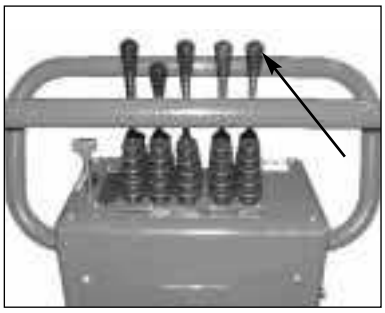
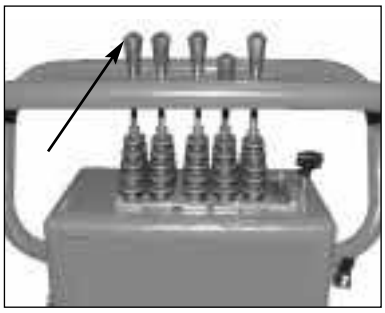

4.5.1.4 Operating external tool

The minidumper hydraulic distributor is provided two a quick connection to operate a hydraulic tool external to the machine.

The hydraulic oil drain is positioned on the oil tank plug.

Join the hydraulic tool pipes to the quick connections and operate the lever as indicated in the picture to put the circuit under pressure.

GASOLINE ENGINE VERSION

DIESEL ENGINE VERSION

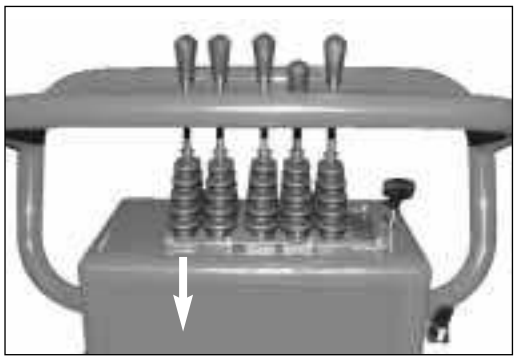

Operating data are:
Max pressure = 150 bar
Max capacity=14 L/m

4.5.2 OPERATING THE UNDERCARRIAGE – EXTENSIBLE VERSION

GASOLINE ENGINE VERSION DIESEL ENGINE VERSION

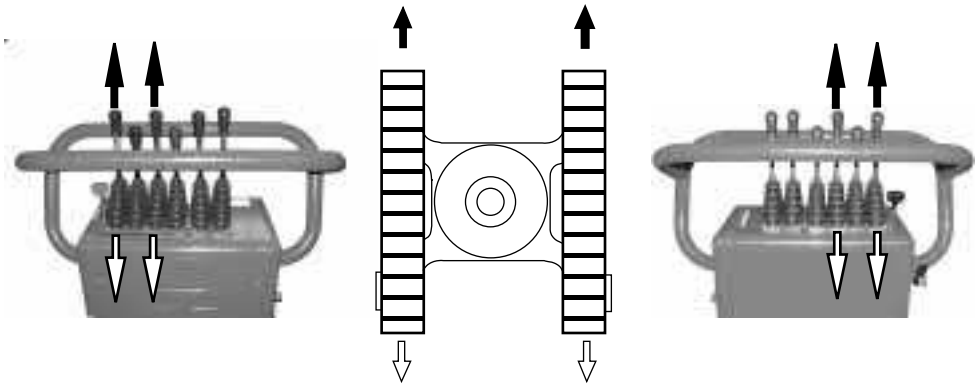

- *Straight forward translation*
  Push both levers forward to go straightforward
  Pull both levers backward to go reverse

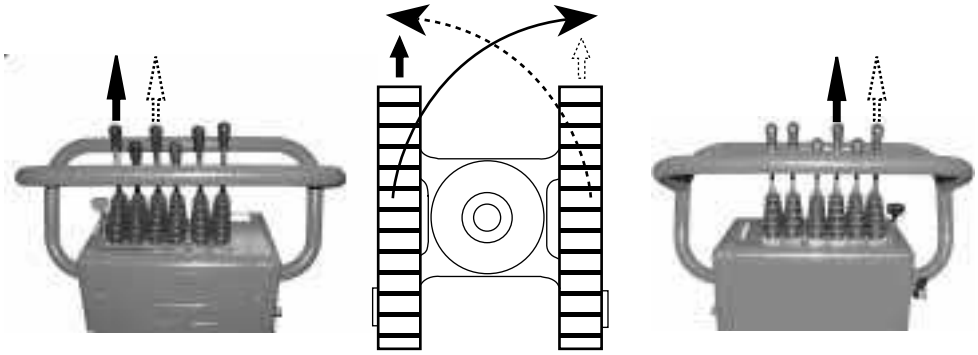

- *Right or left steering*
  To steer right, push left lever forward
  To steer left, move right lever forward

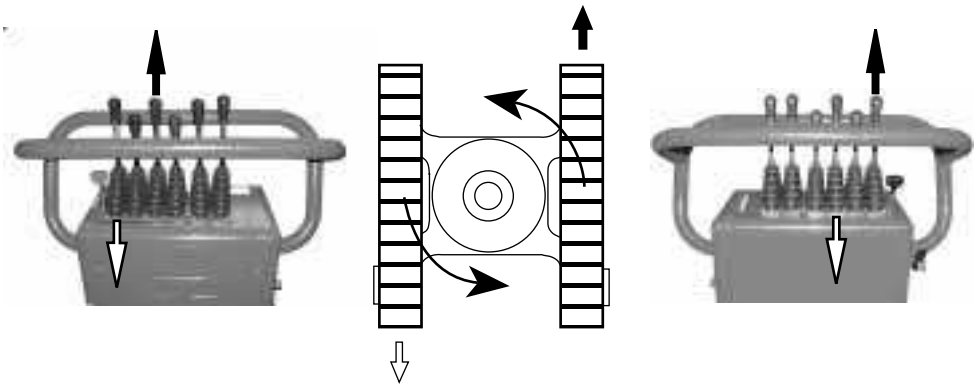

- *Steering on axle*
  Move one lever forward and the other backward.

4.5.2.1 Operating the hydraulic tilting

Operating the lever as indicated allows the hydraulic tilting of the flat bed.

GASOLINE ENGINE VERSION

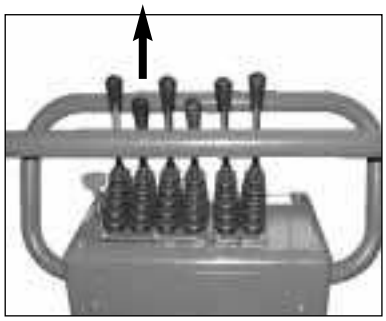

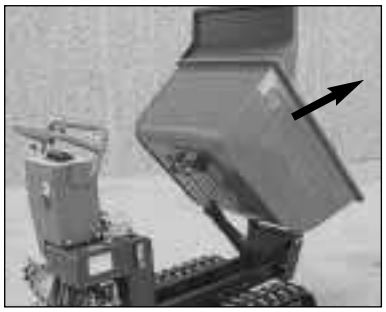

DIESEL ENGINE VERSION

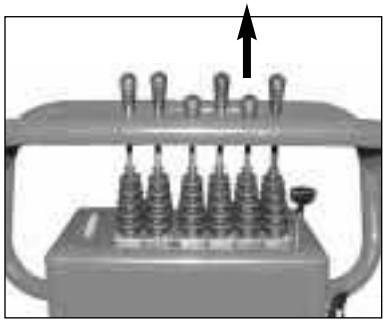

4.5.2.2 Operating extensible undercarriage

- Lever forward: undercarriage opens
- Lever backward, undercarriage closes

GASOLINE ENGINE VERSION

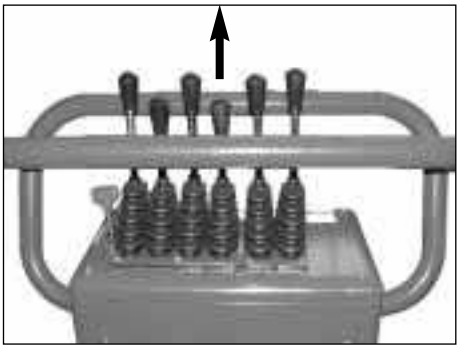

DIESEL ENGINE VERSION

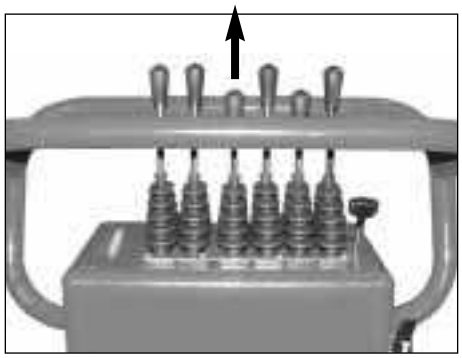

4.5.2.3 Operating 2nd speed translation

To operate the undercarriage second speed, move lever as indicated. Only use this control when translating on a flat surface.

GASOLINE ENGINE VERSION

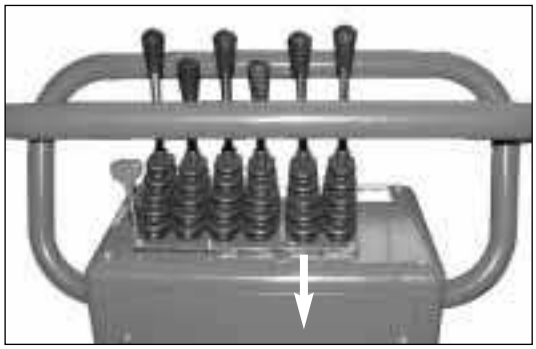

DIESEL ENGINE VERSION

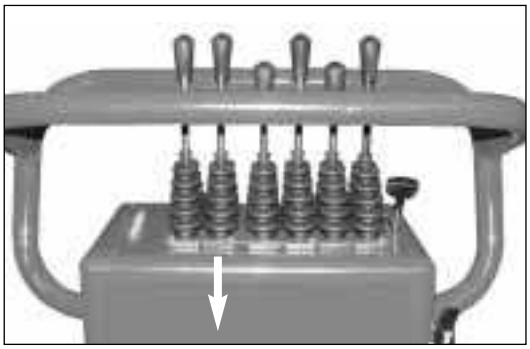

4.5.2.4 Optional control lever

The optional control lever will only be used when an accessory kit is mounted.

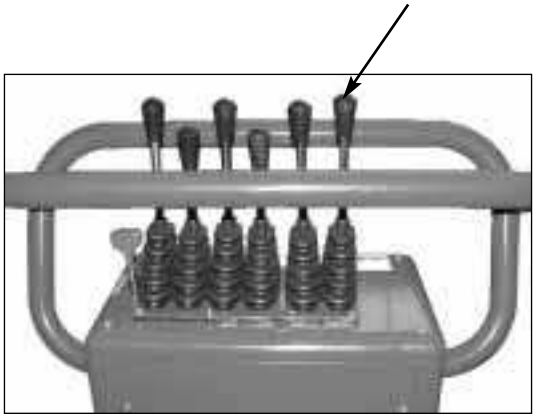

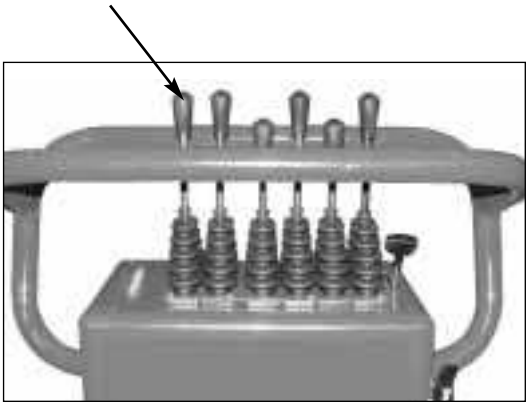

4.5.3 MANOEUVRING ON SOFT SOIL

Avoid driving on soft or not solid enough soil as it might make the machine unsafe.

4.5.4 AVOID MANOEUVRING ON SLOPES

Warning: Manoeuvring on slopes is dangerous. Reduce manoeuvring speed to prevent skidding or tilting.

When possible, do not steer on slopes. If you must do so, do it on solid soil and not on a steep slope.
Do no go across slopes, as there is the risk of tilting over.

4.5.5 PARKING AND STOPPING ON SLOPES

Warning: Parking and stopping on slopes is extremely dangerous. If parking or stopping on a slope is absolutely necessary make sure you do the following:

1. If the engine starts racing on a slope, put all the levers in neutral and then start the engine again.
2. When stopping on a slope, even for a short time, always put blocks under the downward tracks.
3. Before going up a slope, make sure the engine and the hydraulic oil are properly heated up. Otherwise, a slow running of the machine on a steep slope could cause trouble.

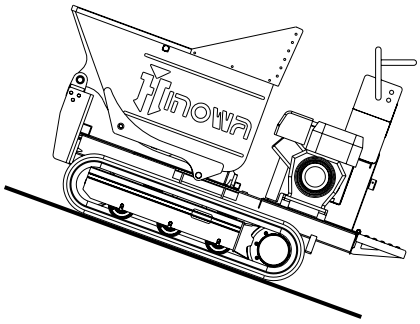

4.5.6 TRANSPORTING THE MACHINE

LOADING THE MACHINE ON A LOW FLATBED LORRY.

Always load and unload the machine on a solid and even surface.

Warning: Always use a ramp or a loading platform to load or unload the machine.

1. The ramps must be strong enough to bear the weight of the machine. Make sure

the slant of the ramp does not exceed 15°.

2. Loading platforms must be strong and wide enough and have the right slant for the machine to go over them.
3. Before loading the machine, clean thoroughly the ramp and the flatbed. Oily, muddy, icy ramps or flat beds can be slippery.

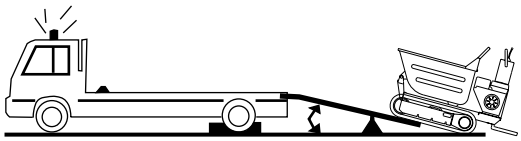

SLOPE LESS THAN 15°

Warning: During cold weather, give the machine time to warm up before loading or unloading it.

Warning:

1. **Avoid steering when going up or down ramps, as it is extremely dangerous. If absolutely necessary, first reverse to the ground or onto the flatbed. Then change directions and start driving again.**
2. **Never operate any other levers but the drive lever when going up or down a ramp. Otherwise the machine might get unbalanced.**
3. **There is a bump up the ramp. Take care when crossing it.**
4. Always drive slowly on a ramp.
5. The machine mid line must always be on the trailer mid-line.

Important: Always fasten chains and cables to the machine frame. Never put chains or cables on or against hydraulic tubes.

6. Put blocks in front and behind the tracks.
7. Fasten every machine corner and the front tool to the trailer with a chain or a cable equipped with a suitable load fastener.

During transport, turn fuel valve on OFF and make sure the engine stays flat to avoid any fuel leaks.
Petrol fumes or oil leaks could take fire.

PRECAUTIONS WHEN TRANSPORTING A MACHINE WITH RUBBER TRACKS

When transporting a machine with rubber tracks, always secure the right and left tracks onto the lorry flatbed by means of metal cables and soft guards.
The metal cables must never touch the rubber tracks.

4.5.7 LIFTING THE MACHINE

Please follow the following safety instructions in order to lift the machine correctly:

- position the machine on a horizontal plane
- nobody has to remain on the driving place by lifting the machine
- check that nobody is nearby the machine
- use cables that are strong enough to bear the machine's weight.

LIFTING POINTS

There are four lifting points on the minidumper. The first one is on the right side frame, the second one is on the left side frame (A) and the other two ones are on the structure basis (B).

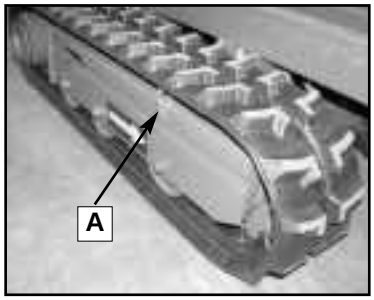

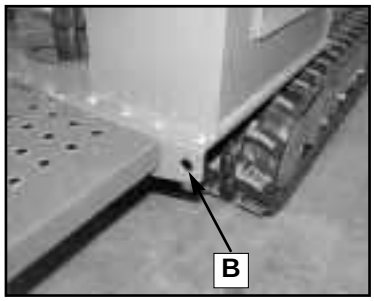

4.5.8 OPERATING WITH RUBBER TRACKS

Avoid these situations when operating a rubber crawler:

1. Never manoeuvre on hard, stony or uneven surfaces such as rocks, rubbles, gravel etc.
2. Never expose rubber tracks to direct sunlight for more than 3 months
3. Avoid improper steering manoeuvres on concrete road, as this will cause an early wear and tear of the shoes. Avoid also driving on alphalted roads when their temperature exceeds 60°C as this will cause not only the wear and tear of the shoes but also damage to the road.
4. Manoeuvring with a loose track shoe on an uneven surface could cause its sudden parting and/or damage the rubber track.
5. Rubber tracks are only meant for soft ground, not on hard or abrasive surfaces such as sand, stones, minerals etc. If rubber tracks are used on these surfaces, you will cause their early wear and tear and also their early distortion.
6. Do not let rubber tracks touch concrete sharp edges.
7. Rubber tracks must never come in contact with fuel or synthetic oil. Clean them immediately if this was to happen.
8. Avoid using rubber tracks near the sea as salted air and saline in general corrode the rubber - inner metallic core bodying.

5 MAINTENANCE

5.1 INSTRUCTIONS FOR PROPER CHECKS AND MAINTENANCE

- Learn how to do proper maintenance on the minidumper and follow all the checking procedure as specified in this manual.
- Do maintenance jobs on a flat and solid surface.
- Never lubricate or grease when the machine is running.
- Secure the carriage if it has to be lifted for maintenance jobs.
- Take care when doing maintenance on the hydraulic system, as the oil is very hot just after work.
- The high pressure remains in the circuit not only when working but also after working.
- Keep all parts in good condition and properly fitted.
- Repair damage immediately and replace worn or broken parts.
- Remove any grease, oil or debris.
- Check for oil leaks and/or damaged hydraulic tubes.
- Only use recommended lubricants. Never mix different lubricants.
- Only use the original Hinowa spare parts.
- Keep clean the track tensioner greasers and the hydraulic cylinder pins on the tipper.
- The recommended maintenance periods are based on normal usage. Severe conditions will require more frequent maintenance.
- Discard lubricants according to current environmental regulations in order to avoid severe damage to environment. Inform yourselves about current regulations.
- Only use proper container when discarding lubricant. Never use containers meant for food or drink as it might induce someone to drink from it.
  Never pour lubricant on the ground, in sewers, canals, ponds or streams. Always observe current environmental regulations when discarding lubricants.

5.2 ENGINE MAINTENANCE

N°			Q.ty	INTERVAL			
				1 DAY	1 WEEK	1 MONTH	3 MONTHS
1	**ENGINE OIL**	Level check		●			
		Change	**L.1,1**			* ●	●
2	**AIR FILTER**	Check		●			
		Cleaning	**1**		●		

*FIRST CHANGE

5.2.1 Checking oil level

(See Engine operator's manual)

5.2.2 Changing engine oil

(See engine operator's manual)

5.2.3 Checking air filter

(See engine operator's manual)

5.3 HYDRAULIC SYSTEM

N°			Q.ty	INTERVAL			
				1 DAY	1 MONTH	3 MONTHS	1 YEAR
1	**HYDRAULIC OIL**	Level check		●			
		Replacement	**l 25**		* ●		●
2	**HYDRAULIC OIL FILTER**	Replacement	**1**		* ●	●	
3	**DRIVE AND ROTATION GEAR OIL**	Level check				●	
		Replacement	**l.0.5 each**		* ●		●

* FIRST REPLACEMENT

5.3.1 HYDRAULIC OIL

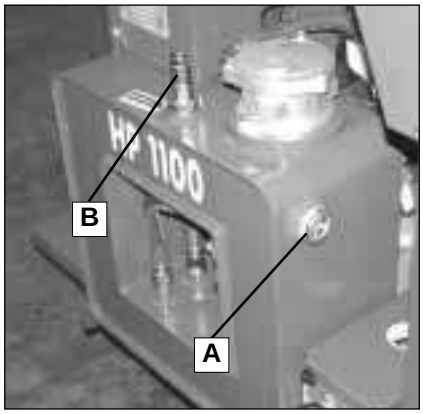

Checking hydraulic oil

To check oil level, place the machine flat and check that the oil level is about half the inspection hole **A**. If not, top up through the filling cap **B**.

Changing hydraulic oil

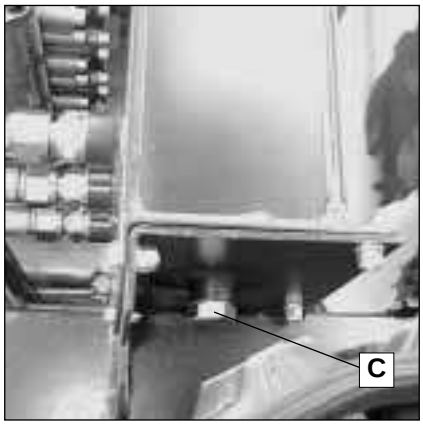

For a complete hydraulic oil change, do the following:
- open top up cap **B**;
- loosen drain plug C at the bottom part of the tank;
- drain completely the oil contained in the tank. Clean the tank thoroughly before filling.

Tighten drain plug C and fill the tank through the filler cap B avoiding mixing different oils.

Only use mineral based oil with wearproof agent HLP type (DIN 51524) or HM (ISO 6743/4) with a viscosity according to ISO VG46 regulations. The recommended filtration must be absolute 10 m or b 10≥75.

5.3.2 HYDRAULIC OIL FILTER

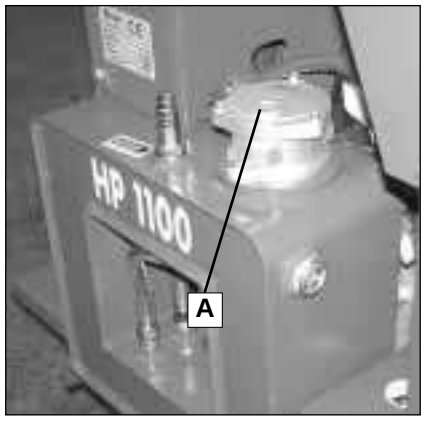

Replacing hydraulic oil filter

The hydraulic oil filter is situated in the upper part of the hydraulic oil tank. To reach it, loosen screws on the filter cover and replace cartridge **A**.

5.3.3 OIL REDUCTION TRANSLATOR

Checking reducer oil level

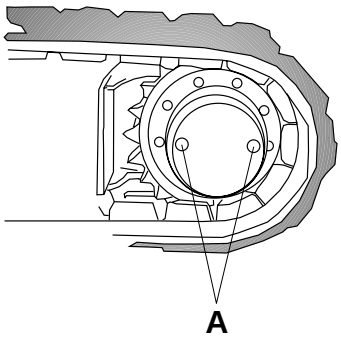

The level of oil in the gearbox must be checked every 100 hours. Block reducer with the plugs at the mid-line. Remove plugs as shown in fig. A and check that the oil level is the correct level. Otherwise, top up through one plug using the other as a measure.

Change reducer oil

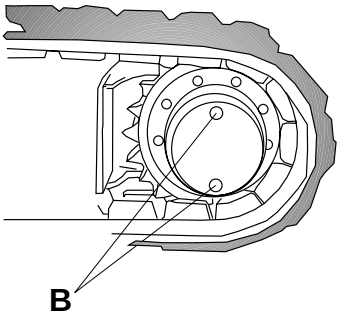

The first oil change must be done after the first 100 hours and then every 1000 working hours. To change the oil proceed as follows:
- Lock the reducer when plugs are placed vertically to the ground as shown in fig.**B**.
- Remove both plugs and drain oil completely.
- Place the reducer with the plugs at the mid-line (fig.**A**) and top up with one plug using the one other as a measure.

IMPORTANT Do not mix oil of different specifications and makes.

Choosing reducer oil

The recommended gear oil for the reducer contains E.P. additives with a viscosity according to ISO VG150 or SAE 80W/90.
If there are a lot of variations in temperature, we recommend synthetic lubricants with the same E.P. specifications, minimum 165-viscosity index and VG150 and VG 220 viscosity grading.

	VG100	VG150	VG320	VG150-200
ISO 3448	-20°C +5°C IV 95min	+5°C +40°C IV 95min	+30°C +50°C IV 95min	-30°C +65°C IV 165min

In any case, we suggest choosing oils which, according to the working temperature, do not get consumed too quickly. A constant working temperature must not exceed 90°C.

5.4 ELECTRIC SYSTEM

5.4.1 Battery

Checking electrolyte and battery terminals

When the battery needs a maintenance check, make sure the engine is off, turn the ignition key on OFF, then remove terminals before check.

Warning: Battery gas can explode. Keep open flames and candles away from the battery. Use a battery-operated torch to check the electrolyte level.

The sulphuric acid in the electrolyte is poisonous. It is strong enough to burn skin, damage clothing and cause blindness if it comes in contact with the eyes.

Avoid dangerous situations:
a. Put the battery in a well ventilated place
b. Wear safety goggles and rubber gloves.

If the battery fluid comes in contact with skin or clothing, rinse it immediately with water and then wash carefully with soap. If it comes in contact with the eyes, rinse them immediately with clean water for 15 minutes and then see a doctor at once.

The fluid level in the battery must always be situated between the minimum and the maximum indicated on the battery.
Add distilled water if necessary.

Make sure to do all these checks before recharging the battery.

Always remove terminals before doing these operations.

5.5 RUBBER TRACK MAINTENANCE

5.5.1 Checking track tension

Stop the machine on a solid and flat surface. Lift machine in safe conditions and put stable blocks under the crawler frame to support it. In correspondence to the central roller of the crawler, measure distance A from the roller bottom to the rubber track rigid inner part. The track tension is correct when measurement A is between 10 and 15 mm.
If the track tension is not within the above mentioned measurements, or too loose or too tight, follow the instructions given in the following paragraph.

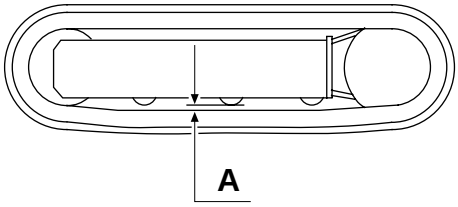

5.5.2 Operations to loosen or tighten track

The grease contained in the hydraulic track is under pressure. Therefore never loosen greasing valve 1 for one than one turn. If the valve is too loose, it might get expelled under the grease pressure, exposing the operator to risk. Never loosen grease nipple 2.
Remove any mud of gravel jammed between the sprocket and the track links before loosening them.

1. Remove screws and cover plate 3 to have access to regulation
2. To loosen track, slowly unscrew valve 1 anti clockwise for no more than one turn. One turn of valve 1 is sufficient to loosen track.
3. If the grease does not start draining, make the track turn slowly.
4. Once the right tension is obtained, turn valve 1 clockwise and then tighten it. Clean any grease leaks.
5. To stretch a track, put a grease gun inside grease nipple 2 and add grease until the track deflection is within specifications.

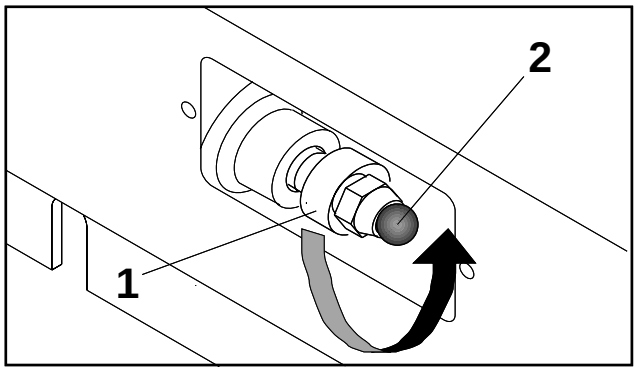

DANGER

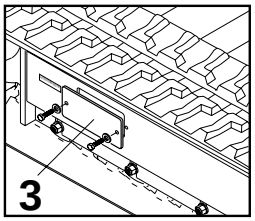

DANGER

There is something wrong if the track remains stretched once valve 1 has been turned anticlockwise or loose after having put grease in grease nipple 2. In any case, never try to remove tracks or dismantle the track tension cylinder, as the high pressure of the grease inside the track is very dangerous.

5.5.3 Checking rubber tracks

Fig. A

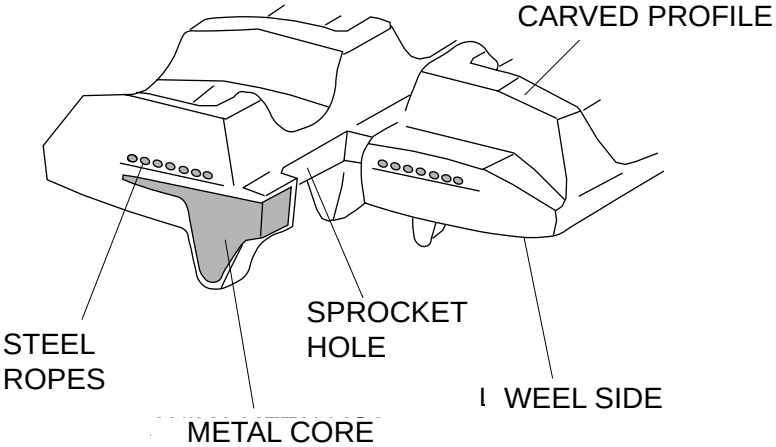

The rubber track structure is shown in fig.A. The steel ropes and the metal core are buried in rubber.
The engraved threads are meant to give stability when moving on soft soil. They are situated in the lower part of the support to the ground. The wheel guides, situated inside the track, prevent the track from coming out of the guide rollers.

Causes of damages

A) Steel ropes break

An excessive tension causes the breaking of the steel ropes under the following conditions:

- When there is an excess of stones and foreign material between the track and the crawler frame.
- When the track comes out of its guide;
- When there is strong friction like quick changes of direction.

B) Wear and tear of metallic cores

As in the case of the a.m. breakage of steel ropes, an excessive tension might cause the bending or the breaking of the metallic cores, which can also be caused by the following:

- Improper contact between sprocket and track;
- Rotation of the inner rollers
- Working in sandy soil.

C) Parting of the metallic cores

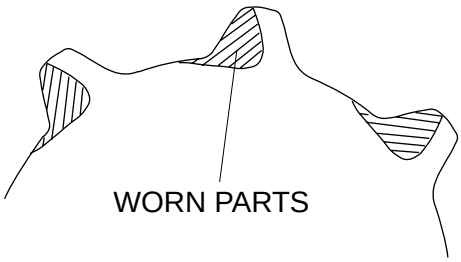

The metallic core acts as rubber adhesive between itself and the steel ropes. Parting can be caused by excessive tension like the breakage of the ropes, as a result of the following:

- The metallic cores have been wound up by the worn sprocket as shown.

If the sprocket shows wear and abrasion, replace it as soon as possible. In case of breakage as per paragraphs A-B-C-, it is necessary to replace the track as this could interfere with proper working.

D) Abrasion and fatigue cracks

1. The cracks at the base of the threads are the result of fatigue rubber bending caused by the sprocket and the track tensioner as shown in photo 4 in the appendix.

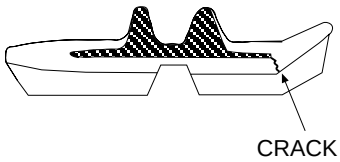

2. The cracks and the curves on the rubber edge are due to manoeuvring the track where there are concrete kerbs and sharp edges.

3. The cracks and abrasions on the rubber of the roller guide slides are caused by fatigue due to the compression of the rubber under the wheel weight combined with working in sandy soil, or repeated sharp changes of direction as indicated in photo 6-8-9 (see the appendix).

4. Abrasion on the thread (carved profile?) may be caused, in particular, when rotating on concrete or gravel surfaces or hard surfaces (see photo 7 in appendix).

The conditions for possible damage indicated in paragraph D point 1, 2, 3 are not to be considered deadly for the track and even if there is a gradual or progressive damage, the track will continue to work. If the progression indicated at point 3 leads to the exposition of the metallic cores. If this exposition is more than half the track circumference, it is time to replace it. However you can still use it.

E) Cracks due to external factors

The cracks on the track outer surface (the one in contact with the ground) are very often due to contacts with gravel, sharp stones, sharp material such as metal plates, nails, glass, which can cause cuts as shown in photo 10 (see the appendix). From the point of view of rubber property this cannot be avoided although it depends from working conditions.
The cracks on the circumference inner surface and on the rubber edge comes from the contact the track has with the crawler body or with concrete sharp edges as shown in photos 12 and 13 (see the appendix.
The crack increases quite slowly.
Even if it does not look good, the track can still be used in hard working conditions.

5.5.4 Replacing rubber tracks

The grease inside the hydraulic track is under pressure. Therefore never loosen grease nipple valve 1 for more than one turn; otherwise it might be expelled under the pressure of the grease, putting the operator at risk. Never loosen grease nipple 2. In case of gravel or mud jammed between the sprocket and the track link, remove them before loosening.

DANGER

Removing rubber track

1. Stop your machine on a solid and horizontal plane, lift it and fix it safely with the apposite support as indicated on the picture below.

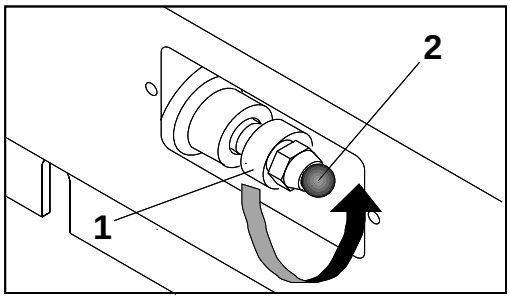

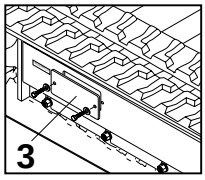

2. Remove screws and take off cover plate 3 to have access to regulation.

3. To loosen track, slowly unscrew valve 1 anti-clockwise for no more than one turn. One turn of valve 1 is sufficient to loosen track.

4. If the grease starts coming out, make the track turn slowly.

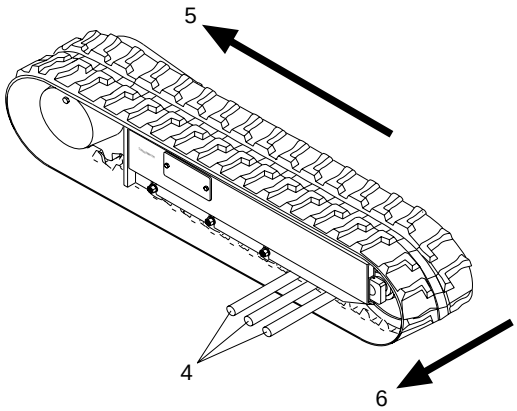

5. Insert 3 steel tubes (4) inside the track, in the space between the rollers. Rotate drive wheel backward (5), so that the steel tubes move along with the track and mesh with track tensioner sprocket. Apply force (6) sideways to run the track and lift it from the track tensioner sprocket.

Fitting rubber track

DANGER

1. Make sure that all the safety conditions are met when the machine is lifted to fit track.

2.Check that the grease inside the hydraulic cylinder has been removed.

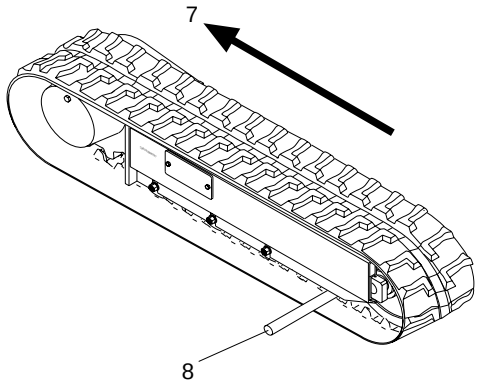

3.Mesh the track links with the sprocket and place the other end of the track on the track tensioning sprocket.

4.Rotate driving wheel backward (7) pushing the track shoes inside the frame (8).

5. By using a steel tube, position track and rotate driving wheel again.

6. Make sure the track links are properly meshed onto the sprocket and the track-tensioning sprocket.

7. Adjust track tension (see paragraph 5.3.2) - “Operations to loosen/stretch track”).

8. Place rubber crawler on the ground.

5.6 CHECHING BOLTS AND NUTS TIGHTNESS

According to the use of the carriage, it is necessary to check all the parts, bolts and nuts that could become loose.
Pay special attention to the frame parts such as the track tensioning wheels, the shifting gearmotor, driving wheel and guide rollers. Check them for tightness as per the chart beside:

Thread diameter mm.	Diametral pitch mm.	Kgm
6	1	1,3 ± 0,15
8	1,25	3,2 ± 0,3
10	1,5	6,5 ± 0,6
12	1,75	11 ± 1
14	2	17,5 ± 2
16	2	27 ± 3
18	2,5	37 ± 4
20	2,5	53 ± 6
22	2,5	73 ± 8
24	3	92 ± 10
27	3	135 ± 15
30	3,5	184 ± 20

5.7 STORING THE MACHINE

1. Control the machine. Repair worn or damaged parts. Replace new parts if necessary.
2. Clean air filter elements.
3. Lubricate all greasing points.
4. Put tracks on stable blocks. Lubricate with oil the pins of the track links (except in the case of rubber tracks).
5. Wash the machine.
6. Remove the battery, recharge it and store it in a dry place.
7. Paints parts that might get rusty.
8. Store the machine in a dry indoor place. If stored outdoors, protect it against rain with a sheet.

Removing the machine from storage

Warning! Only turn the engine on in a well-ventilated place.

1. Fill fuel tank. Check all fluid levels.
2. Run the engine at half speed for a few minutes before starting work.
3. Run hydraulic parts several times.
4. Carefully check the whole system before making the machine work at full load.

6 TECHNICAL SPECIFICATIONS

6.1 Technical specifications

Gasoline engine
Brand and model .....HONDA GX390
No. cylinders/cubic displacement .....one-cylinder 389 cm^3
Max power .....13 HP - 3600 g/1'
RPM .....3500 g/1'
Electric starting.....optional

Diesel engine
Brand and model .....YANMAR L100AE
No. cylinders/cubic displacement .....one-cylinder 406 cm^3
Max power .....10 HP - 3600 g/1'
RPM .....3500 g/1'
Electric starting .....standard

Hydraulic system
Pumps: No. and type .....3 by gears - 4 cm^3
Capacity ..... 15 l/1'
Pressure .....150 bar

Undercarriage
Rubber track width.....180 mm
No. rollers per side.....3 + upper guide
Translation speed .....2,1 - 3,4 km/h
Optional hydraulic widening .....750/1050 mm

Operating weight
Operating weight without operator (fixed width undercarriage) .....430 kg
Operating weight without operator (variable width undercarriage).....490 kg

Performances
Max slope.....20° (≈ 45%)
Loading capacity (with kit) .....1100 kg

Noise level (ISO 5131).....103 dB (A)

Standard equipment
- Second translation speed
- Hydraulic quick coupling for the kit
- Antisliding footboard
- Heat exchanger
- Reinforced tracks

TRACK HP1100

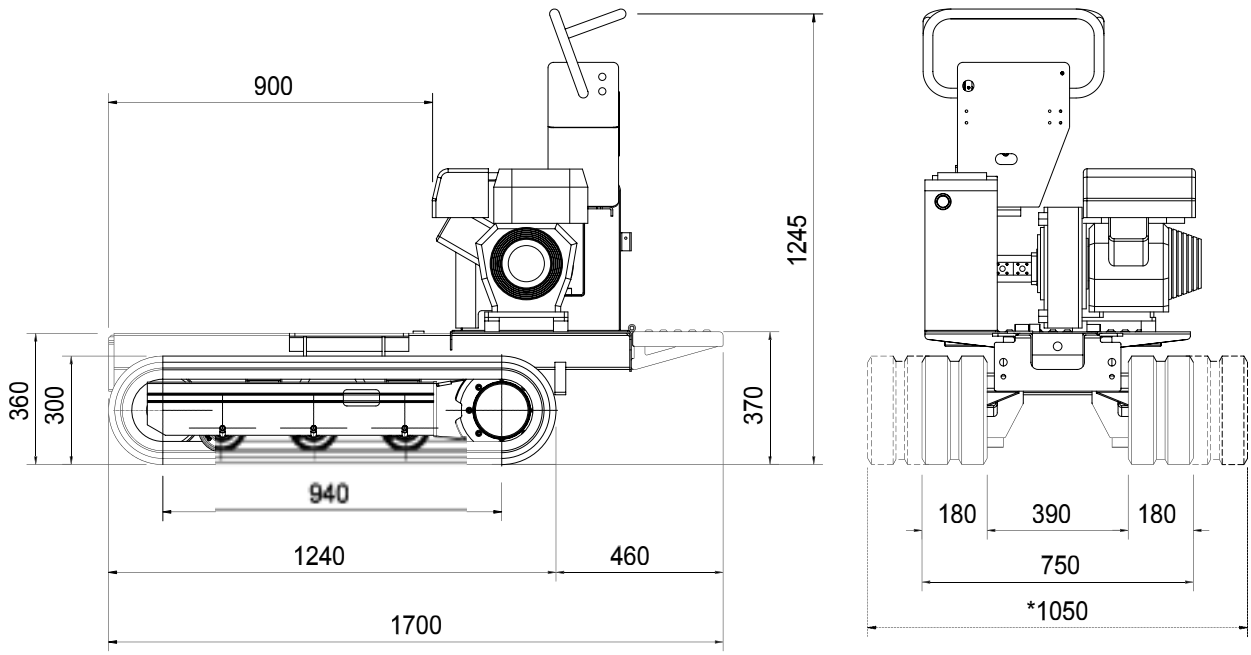

* Optional: track hydraulic widening

6.2 Hydraulic system diagram–standard version-gasoline engine

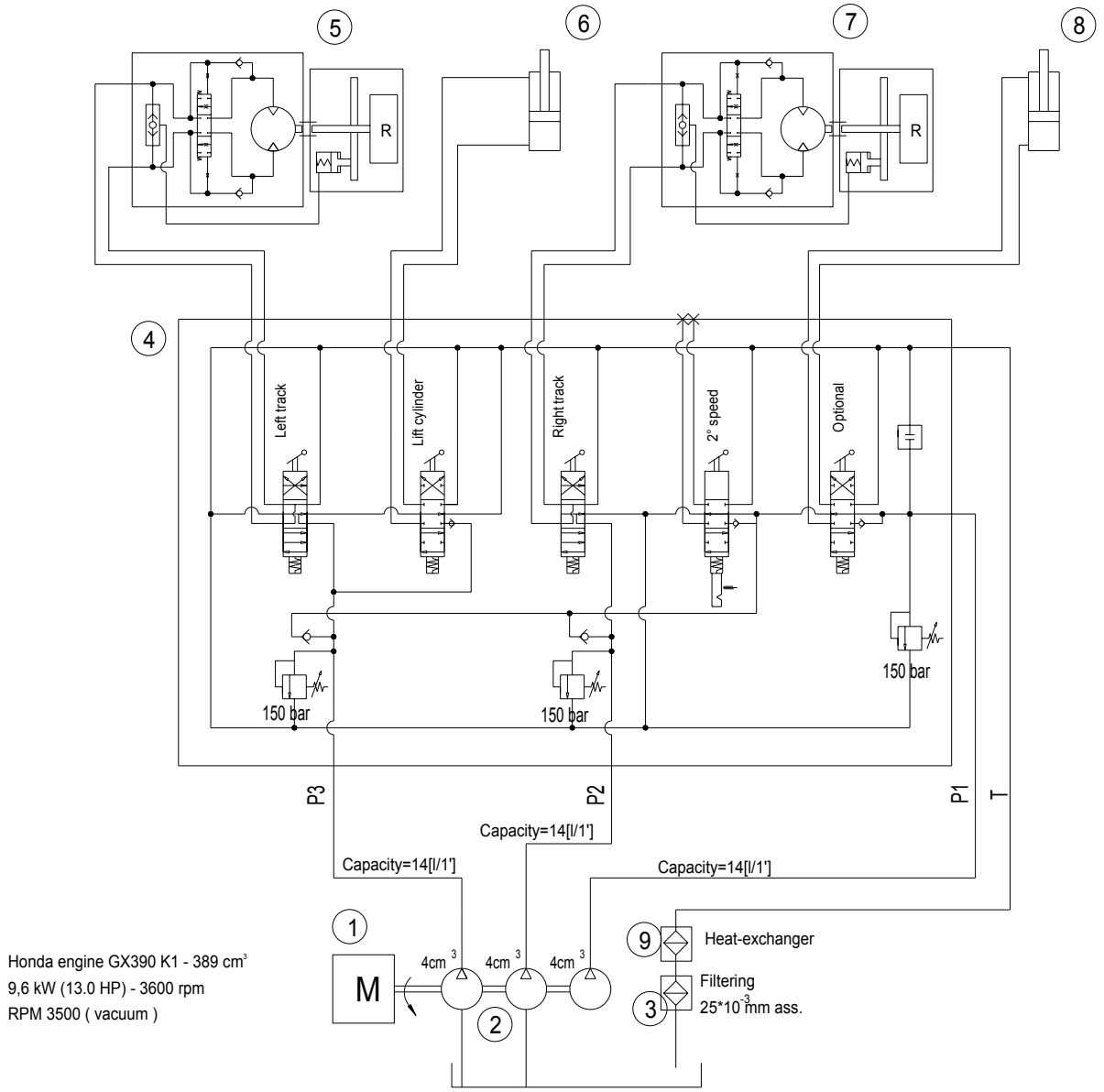

6.2.1 Hydraulic system diagram legend

1A. Honda engine (manual start)
1B. Honda engine (electrical start)
2. Triple gears pump
3. Drain filter
4. Distributor HC-D9/5
5. Left track reduction gear drive
6. Lifting cylinder
7. Right track reduction gear drive
8. Optional
9. Heat-exchanger

6.3 Hydraulic system diagram–extensible version-gasoline engine

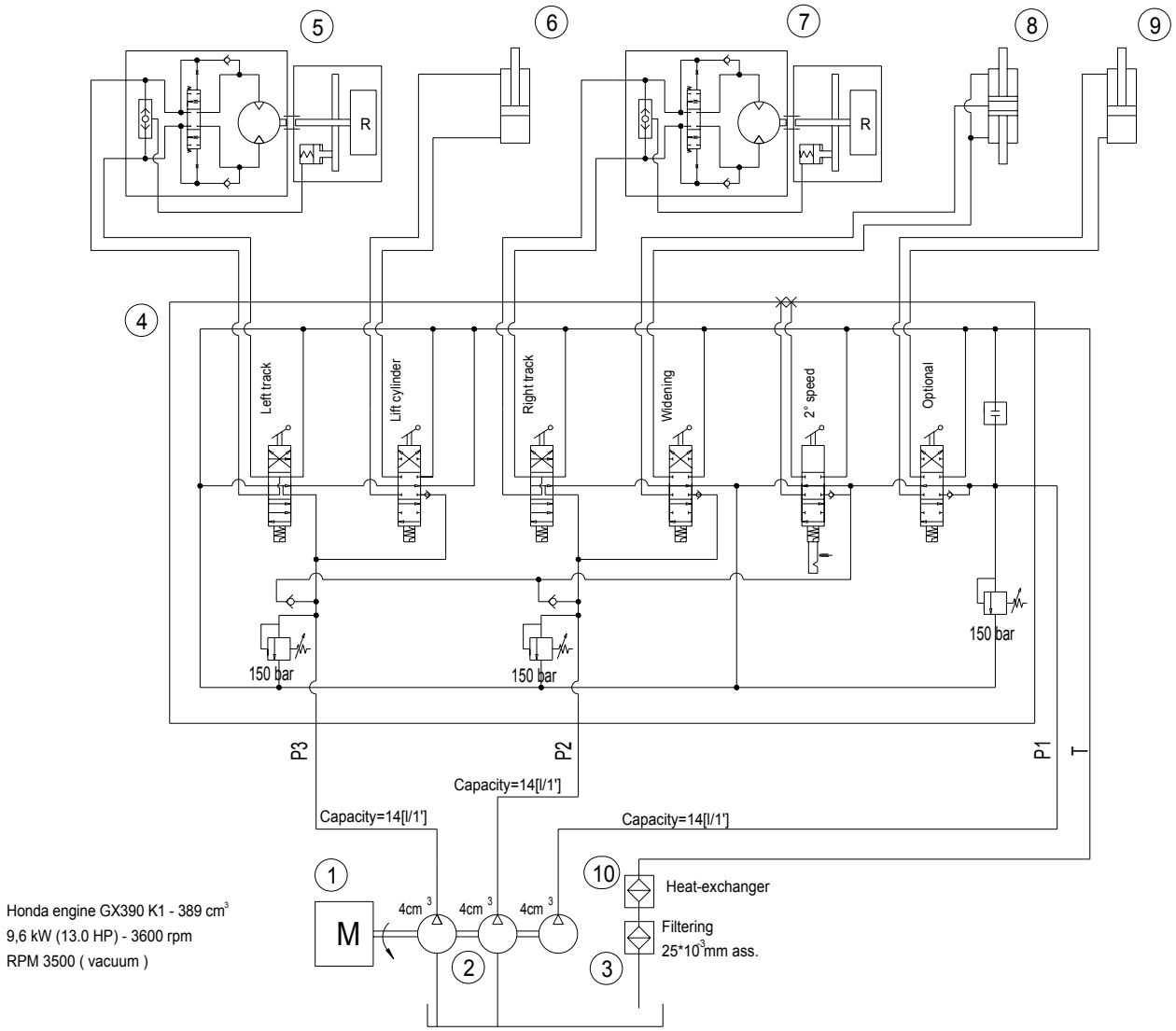

6.3.1 Hydraulic system diagram legend

1A. Honda engine (manual start)
1B. Honda engine (electrical start)
2. Triple gears pump
3. Drain filter
4. Distributor HC-D9/6
5. Left track reduction gear drive
6. Lifting cylinder
7. Right track reduction gear drive
8. Widening
9. Optional
10. Heat-exchanger

6.4 Hydraulic system diagram–standard version-diesel engine

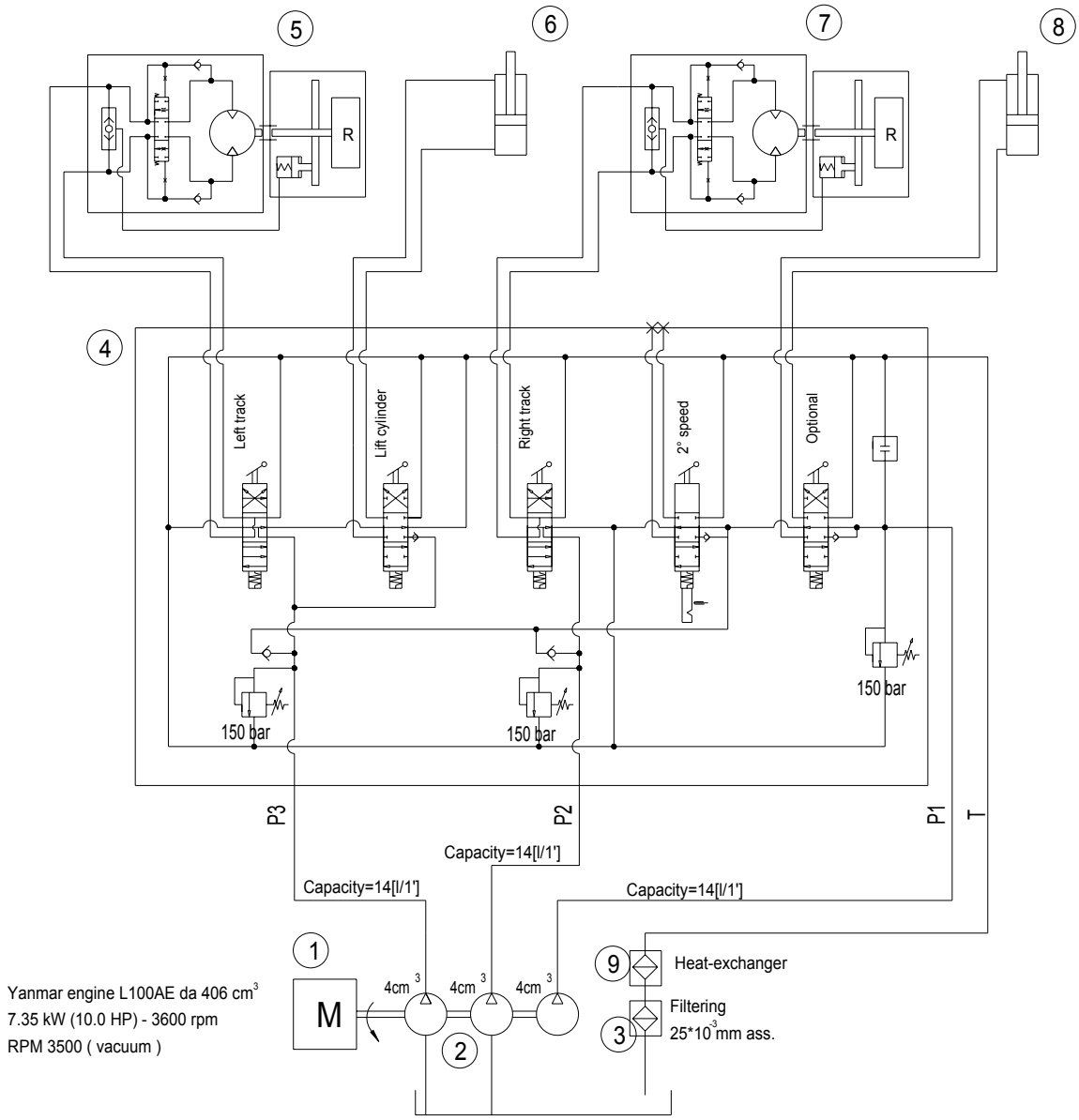

6.4.1 Hydraulic system diagram legend

1. Yanmar engine
2. Triple gears pump
3. Drain filter
4. Distributor HC-D9/5
5. Left track reduction gear drive
6. Lifting cylinder
7. Right track reduction gear drive
8. Optional
9. Heat-exchanger

6.5 Hydraulic system diagram–extensible version-gasoline engine

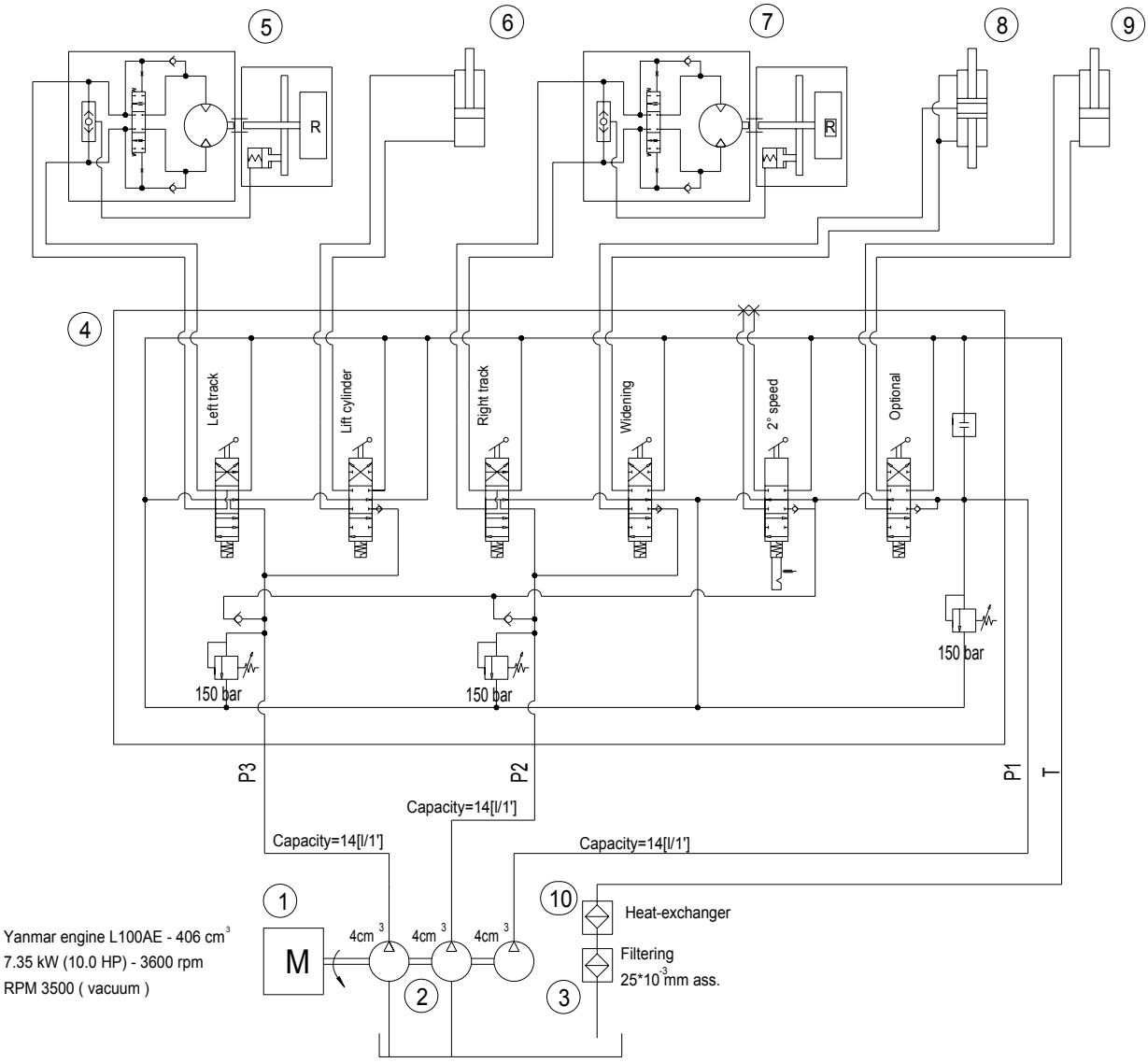

6.5.1 Hydraulic system diagram legend

1. Yanmar engine
2. Triple gears pump
3. Drain filter
4. Distributor HC-D9/6
5. Left track reduction gear drive
6. Lifting cylinder
7. Right track reduction gear drive
8. Widening
9. Optional
10. Heat-exchanger

7 IDENTIFYING MALFUNCTIONS

In order to get the carriage to operate in the best way, never dismantle it unless it is absolutely necessary. If the following instructions to identify breakdowns were not enough to bring back the carriage to its proper working conditions, contact an authorised **Hinowa** dealer.
The engine does not start:
- Is the quality of the fuel good enough?
- Is there enough oil in the engine?
- Are there any sparks coming from spark plugs?
  a. Remove the spark plug pipette. Clean any trace of dirt at the base of the spark plug, then remove the spark plug.
  b. Insert the spark plug into the pipette.
  c. Put engine switch on ON.
  d. Earth side electrode and pull the self-winding starter to check if there are any sparks between the electrodes.

Warning! If there are fuel leaks, make sure that the area is dry before checking spark plug or starting the engine. Petrol fumes or fuel leaks can take fire.

Caution! Controls must be done in a well-ventilated place.

Check the following points if the engine runs but the carriage does not work properly.:

- Hydraulic movements too slow:

Cold oil	Warm up system up to usual working temp.
Wrong oil	Use right oil
Engine rpm too low	Contact your authorised dealer
Broken pump	Contact your authorised dealer

- Oil temperature too high:

Wrong oil	Use right oil
Clogged up filter	Replace filter
Broken pump	Contact your authorised dealer
Defective exhaust valve	Contact your authorised dealer
Dirty oil	Contact your authorised dealer

- Oil is foaming:

Air sucked from tank to pump	Find out and eliminate defect
Wrong oil	Use right oil
Water in oil	Change oil
Oil level too high or too low	Bring oil to proper level

- Low or no oil pressure:	
Wrong oil	Use right oil
Lack of oil in system	Fill up with right oil
Defective exhaust valve	Contact your authorised dealer
- No movements at all (noisy pump):	
Broken hydraulic pump	Contact your authorised dealer
Lack of oil	Add oil
Damaged suction line	Repair suction line
- Lack of power in movements:	
Broken pump	Contact your authorised dealer
Exhaust pressure regulated too low	Contact your authorised dealer
Hydraulic oil level too low	Add oil
- Left and right joysticks not working:	
Exhaust valve not working properly	Contact your authorised dealer
Damaged hoses or connectors	Repair or replace them
Loose connectors	Tighten them
Broken hydraulic pump	Contact your authorised dealer
- Only one joystick is working:	
Damaged hoses or connectors	Repair or replace them
Loose connectors	Tighten them
- A reduction unit not working::	
Damaged reduction unit	Contact your authorised dealer
Damaged hydraulic circuit	Repair or replace it
- Irregular traverse movements:	
Too tight or too loose track	Adjust tension
Lower pump performance	Contact your authorised dealer
Lower engine performance	Contact your authorised dealer
Deformed carriage frame	Repair or replace it
Stones or debris between track links	Remove them
Control valves not working properly	Contact your authorised dealer

APPENDIX

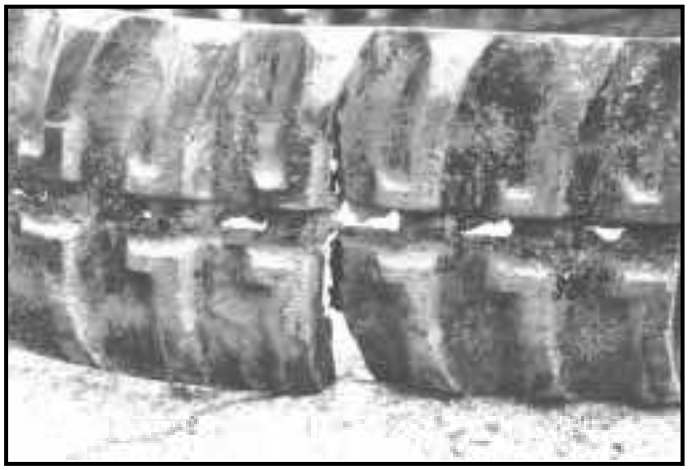

PHOTO N. 1

STEEL ROPES THAT
HAVE BEEN CUT

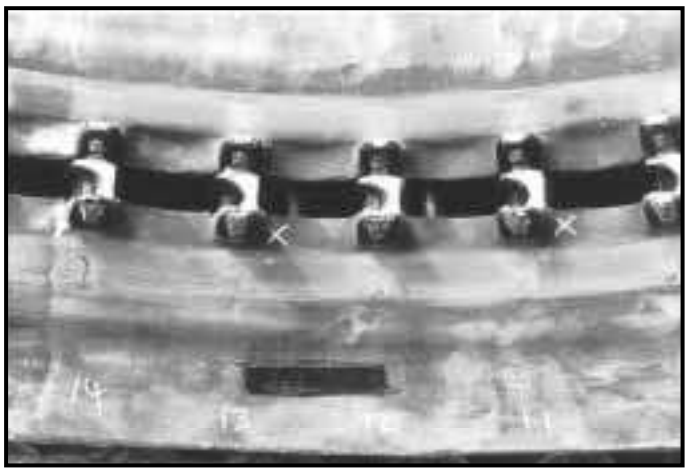

PHOTO N. 2

WORN AND BROKEN
STEEL CORES

PHOTO N. 3

STEEL CORE PARTING

PHOTO N. 4

BREAKING OF ENGRAVED THREAD BASE CAUSED BY RUBBER BENDING (CURVING) UNDER PRESSURE

PHOTO N. 5

BREAKING OF TYRE OUTER PART UNDERNEATH STEEL CORE EDGE

PHOTO N. 6

BREAKING OF TYRE INNER PART ON THE STEEL CORE SIDE

PHOTO N. 7

WORN ENGRAVED
THREAD

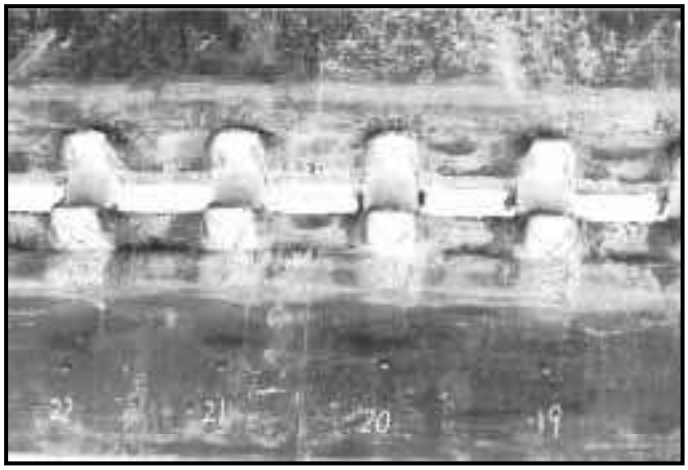

PHOTO N. 8

RUBBER WORN
BY DRIVING WHEELS
(FIRST STAGE)

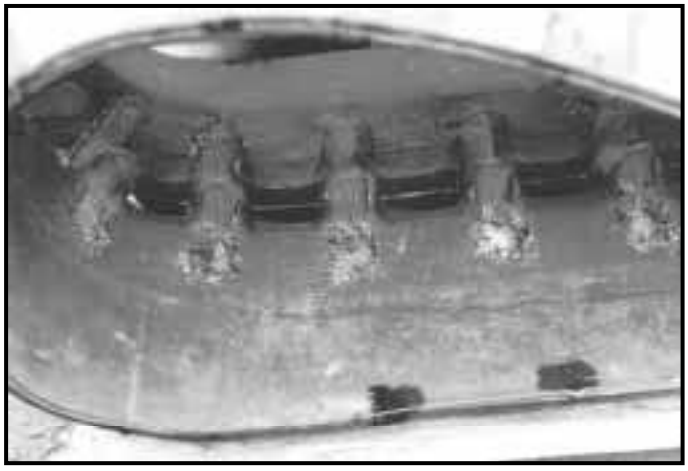

PHOTO N. 9

RUBBER WORN
BY DRIVING WHEELS
(FINAL STAGE)

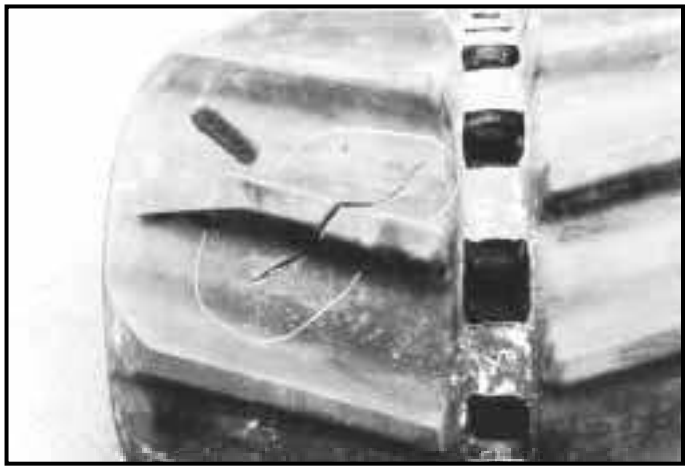

PHOTO N. 10

CUT FROM SHARP MATERIAL ON TYRE OUTER PART

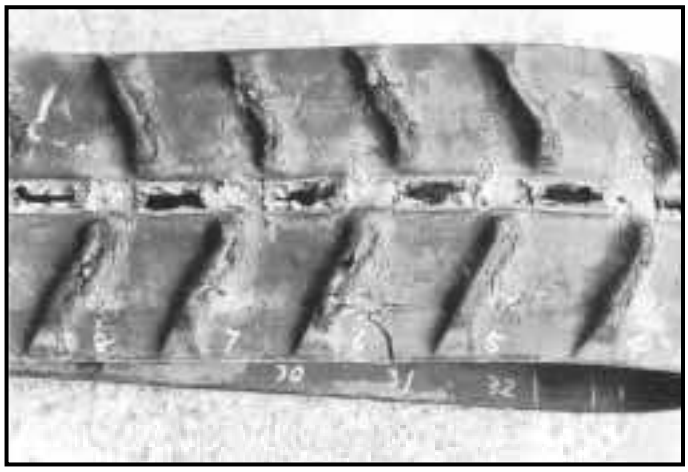

PHOTO N. 11

TYRE OUTER PART BROKEN AND WORN BY HARD SOIL CONDITIONS

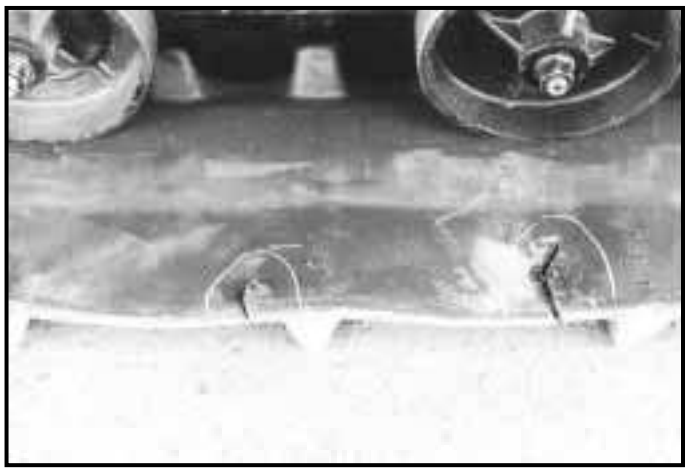

PHOTO N. 12

CUT ON EDGE OF TYRE INNER PART CAUSED BY SHARP MATERIAL OR SHARP EDGES

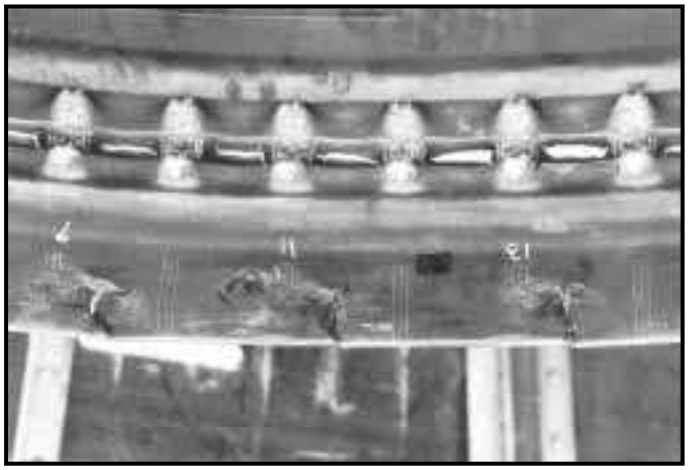

PHOTO N. 13

BREAKING OF TYRE
INNER PART CAUSED BY
CONTACT WITH
CRAWLER FRAME

Legal and administrative seat

HINOWA S.p.A.
I - 37054 NOGARA (VR) via Fontana
Tel. +39 0442 539100 Fax +39 0442 539075
hinowa@hinowa.it
www.hinowa.com