Robex 140LC-7A

Standard Equipment

ISO standard cab
- All-weather steel cab with all-around visibility
- Safety glass windows
- Raise-up type windshield wiper
- Sliding fold-in front window
- Sliding side window
- Lockable door
- Hot & cool box
- Accessory box & Ash-tray

Computer Aided Power Optimization(New CAPO) system
- 2-power mode, 3-work mode, 2-user mode
- Auto deceleration & one touch deceleration system
- Auto warm up system
- Auto overheat prevention system

Heater (7500kcal/hr, 30000BTU/hr)
Heater & Defroster
Self diagnostic system
Centralized monitoring
- LCD display
  - Engine speed
  - Clock & Error code
- Gauges
  - Fuel level gauge
  - Engine coolant temperature gauge
  - Hyd. oil temperature gauge
- Warning
  - Engine coolant & Fuel level
  - Check Engine & CPU
  - Engine oil pressure
  - Engine coolant temperature
  - Hyd. oil temperature
  - Low battery
  - Air cleaner clogging

Fully adjustable suspension seat with seat belt
Slidable joystick, pilot-operated
Automatic swing brake
Removable reservoir tank
Fuel pre-filter with Fuel warmer
Boom holding system
Arm holding system
Counterweight (2,200kg, 4850lb)
mono boom (4.6m, 15′ 1″)
Arm (2.5m, 8′ 2″)
Track shoes (600mm, 24″)
Track rail guard
Am/Fm radio and USB player
- Remote control switch

Console box tilting system (LH.)
Three front working light
Electric horn
Batteries (2×12V×80AH)
Battery master switch
Starting Aid(air grid heater), cold weather

Optional Equipment

Air-conditioner (5000kcal/hr, 20000BTU/hr)
Sun visor for cabin inside
Fuel filler pump (35 ℓ /min, 9.5 USgpm)
Beacon lamp
Safety lock valve for boom cylinder
Safety lock valve for arm cylinder
Single acting piping kit (breaker, etc)
Double acting piping kit (clamshell, etc)
Quick coupler piping kit
Accumulator, work equipment lowering
12 volt power supply (24V DC to 12V DC converter)
Electric. transducer
Overload warning device
Travel alarm
Various optional Boom
- Short boom (4.1m, 13′ 5″)
- Hyd. adjustable boom (4.9m, 16′ 1″)

Various optional Arms
- Super short arm (1.9m, 6′ 3″)
- Short arm (2.1m, 6′11″)
- Long arm (3.0m, 9′10″)

Various optional Buckets (SAE heaped)
- Standard bucket (0.58m³, 0.76yd³)
- Narrow bucket (0.23m³, 0.30yd³)
- Narrow bucket (0.40m³, 0.52yd³)
- Narrow bucket (0.46m³, 0.60yd³)
- Narrow bucket (0.52m³, 0.68yd³)
- Light duty bucket (0.65m³, 0.85yd³)
- Light duty bucket (0.71m³, 0.93yd³)
- Slope finishing bucket(0.45m³, 0.59yd³)
- Ditching bucket(0.55m³, 0.72yd³)

Quick coupler kit
Cabin roof-cover transparent
Cabin FOPS/FOG(ISO 10262)
Cabin lights
Track shoes
- Triple grousers shoe (500mm, 20″)
- Triple grousers shoe (700mm, 28″)
- Triple grousers shoe (800mm, 32″), R140LCM-7

Special cowl
- Air vent type side door

Lower frame under cover
Tool kit
Rotating piping kit
Operator suit
R140LCD-7 Blade : 550mm(1′ 10″)×2500mm(8′ 2″)
550mm(1′ 10″)×2600mm(8′ 6″)
Full track rail guard
Seat
- Adjustable air suspension seat
- Mechanical suspension seat with heater
- Adjustable air suspension with heater

Standard and optional equipment may vary. Contact your Hyundai dealer for more information. The machine shown may vary according to International standards. All US measurement rounded off to nearest pound or inche.

HYUNDAI
HEAVY INDUSTRIES CO.,LTD.
CONSTRUCTION EQUIPMENT

Head Office (Sales Office)
1 JEONHA-DONG, DONG-GU, ULSAN, KOREA **TEL:** (82) 52-202-7970, 7729, 0971 **FAX:** (82) 52-202-7979, 7720

U.S. Operation: Hyundai Construction Equipment U.S.A., Inc.
955 ESTES AVENUE, ELK GROVE VILLAGE, **IL.** 60007, U.S.A. **TEL:** (1) 847-437-3333 **FAX:** (1) 847-437-3574

European Operation: Hyundai Heavy Industries Europe N.V.
VOSSENDAAL 11, 2440 GEEL, BELGIUM **TEL:** (32) 14-56-2200 **FAX:** (32) 14-59-3405

India Operation: Hyundai Construction Equipment India Pvt., Ltd.
PLOT NO.A-2, CHAKAN INDUSTRIAL AREA, VILL.- KHALUMBRE, TALUK.- KHED., DIST.- PUNE 410 501, INDIA
TEL: (91) 21-3530-1700 **FAX:** (91) 21-3530-1712

PLEASE CONTACT

www.hyundai-ce.com 2009. 11 Rev.2

■ Some of the Photo may include optional equipment.

We build a better future

Robex CRAWLER EXCAVATOR Applied Tier 3 Engine

140LC-7A 140LCD-7A 140LCM-7A

HYUNDAI
HEAVY INDUSTRIES CO.,LTD.

Courtesy of Machine.Market

Built for Maximum Power, Performance, Reliability.

A new chapter in construction equipment has now begun.
Making the dream a reality.

Robex 140LC-7A

■ Some of the photos may include optional equipment.

Courtesy of Machine.Market

Operator's Comfort is Foremost.
Wide Cab Exceeds Industry Standards.

Technology in Cab Design

Visibility
- Even more visibility than before, for safer, more efficient operating.

Excellent Ventilation
- Ventilation has been improved by the addition of the larger fresh air intake system, and by providing additional air flow throughout the cab.
- Sliding front and side windows provide improved ventilation.
- A large sunroof offers upward visibility and additional ventilation.

Comfortable Operator Environment
- The control levers and seat can be adjusted to provide maximum operator comfort.
- The seat is fully adjustable for optimum operating position, reducing operator fatigue.
- Console boxes slide forward and backward for improved accessibility.
- The proportional pressure controls reduce unnecessary exertion while ensuring precise operation.
- Large windows allow excellent visibility in all directions.

Low Noise Design
- The Robex new 7A series was designed with low operation noise in mind.
- Hyundai engineering helps to keep interior and exterior noise levels to a minimum.
- The cab's noise levels have been additionally reduced by improving the door seals for the cab and engine compartments.
- An insulated diesel engine compartment with sound-damping material also reduces noise.

1 2 3

1 Wide, Comfortable Operating Space
2 Steel Cover Sunroof
3 Dial Type Engine Speed Switch and / Key Switch

Radio/ USB Player & Remote Control Switch

■ Some of the photos may include optional equipment.

Courtesy of Machine.Market

Improved Intelligent Display

Instrument Panel is installed in front of RH console box.
It is easy to check all critical systems with easy-to-read indicators.

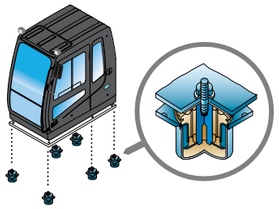

Minimization of Shock and Vibration through Cab Mounting System

The application of Viscous Mounting to the cabin support provides the operator with a much improved ride. The operator work efficiency will increase as the shock and noise level in the cabin decreases.

Operating Environment

Maximum Protection

▲ Storage Box and Cup Holder

An Additional storage box and cup holder are located behind operator's seat, and it keeps food and beverages cool or hot.

◀ Wide Cab with Excellent Visibility

The cab is roomy and ergonomically designed with low noise level and good visibility. A full view front window and large rear and side windows provide excellent visibility in all directions.

Highly Sensitive Joystick and Easy Entrance

New joystick grips for precise control have been equipped with 4 switches.

Left	Power boost/Dummy One touch deceleration
Right	Horn/Optional/Dummy

Easy-to-Reach Control Panels

Switches and other essential controls are located near the operator.
This helps keep operator movement to a minimum, enhancing control with less operator fatigue.

Rear Emergency Exit Window

Rear Exit Window is designed with easy exit for operator's safety.

Raise-up Wiper and Cabin Lights

Raise-up wiper has enhanced for the better front view. Cabin Lights enhances safety by brightly lighting the surroundings during night work(optional)

Wide, Comfortable Operating Space

All the controls are designed and positioned according to the latest ergonomic research. Reinforced pillars have also been added for greater cab rigidity.

Smooth Travel Pedal and Foot Rests

The best working conditions in a pleasant environment.

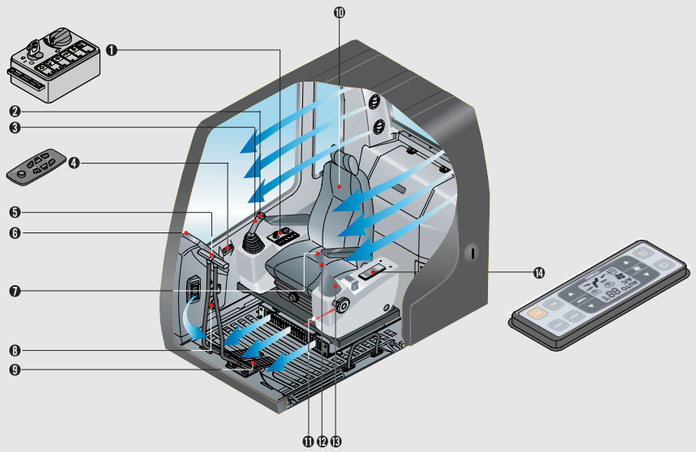

❶Centralized control panel
❷Horn button
❸Option button
❹Remote Radio control
❺Travel lever
❻Cluster
❼One touch decel button
❽Hour meter
❾Travel pedal
❿Fully adjustable suspension seat
⓫Safety lever
⓬Power boost button
⓭Joystick control lever
⓮Air Conditioner and Heater controller

Courtesy of Machine.Market

Automatic Engine Overheat Prevention

If the engine coolant temperature gets too high, the CPU controller lowers the engine speed and cools the engine.

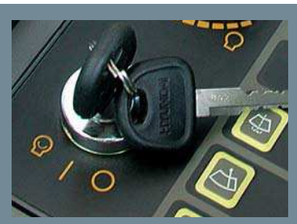

Anti Restart System

The new system protects the starter from re-starting during engine operation, even if the operator accidentally turns the start key again.

Power Boost Control System

When the power boost system is activated, digging power increases about 10%.
It is especially useful when extra power is temporarily needed, for instance, when digging hard earth and rock, or if the bucket teeth are stopped by a stubborn tree root.

Automatic Warming-up System

After the engine is started, if the engine coolant temperature is low, the CPU controller increases the engine speed and automatically increases the pump flow rate to warm up the engine more effectively.

Advanced Hydraulic System

ADVANCED CAPO SYSTEM

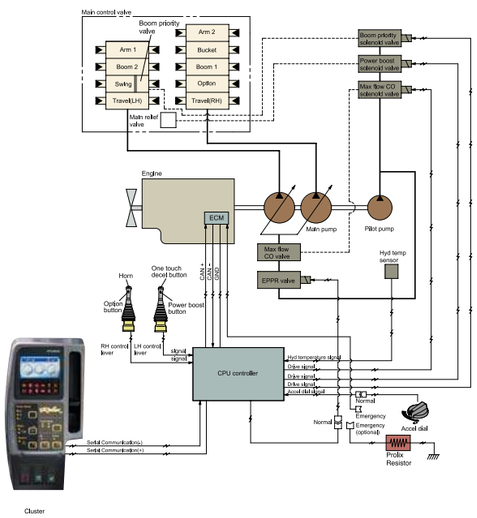

The advanced CAPO(Computer Aided Power Optimization) system maintains engine and mutual pump power at optimum levels. Mode selections are designed for various work loads and maintaining high performance while reducing fuel consumption.
Features such as auto deceleration and power boost are included in the system. The system monitors engine speed, coolant temperature, and hydraulic oil temperature. Contained within the system are self diagnostic capabilities which are displayed by error codes on the cluster.

Self Diagnosis System

The CPU controller diagnoses problems in the CAPO system caused by electric and hydraulic malfunctions and displays them on the LCD monitor of the cluster through error codes. This controller has the capacity to identify 48 distinct types of errors. As the information from this device, such as engine rpm, main pump delivery pressure, battery voltage, hyd. temperature, and the state of all types of electric switches, provides the operator with a much more exact state of machine operating condition.
This makes the machine easier to troubleshoot when anything does go wrong.

One Touch Decel System

When the one touch decel switch is pressed, CPU controller controls the accel actuator to reduce engine speed to 850 rpm. And then the one touch decel switch is pressed again, the engine speed recovers.

Pump Flow Control System

In neutral position: Pump flow is reduced to a minimum to eliminate power loss.
In operation: Maximum pump flow is delivered to the actuator to increase the speed. With movement of the control lever, pump flow is automatically adjusted and the actuator speed can be proportionally controlled.

Boom & Arm Holding System

The Holding valves in the main control valve prevents the boom & arm from dropping over an extended period in neutral position.

Arm Flow Regeneration System

Arm flow regeneration valve provides smooth arm-in operation without cavitation.

Hydraulic Damper in Travel Pedal

Improved travel controllability & feeling by shock reducing when starting and stopping.

Auto Decel / One Touch Decel RPM

1 **POWER MODE**
H mode: High power S mode: Standard power

2 **WORK MODE**
Heavy duty work General work Breaker

3 **USER MODE**
M mode: Maximum Power
U mode : Memorizing Operator's Preferable Power Setting

Auto Deceleration System

When remote-control valves are in neutral position more than 4 seconds, CPU controller instructs the accel actuator to reduce engine speed to Auto Decel RPM : 1000rpm. This decreases fuel consumption and reduces cab noise levels.

Max. Flow Cut-off System

For precise control and finishing work, the Max. Flow Cut-off System reduces pump flow, thus allowing smooth operation.

Mitsubishi D04FD-TAA Engine

The six cylinders turbocharged and charged air cooled, engine is built for power, reliability and economy. This engine meets EPA tier 3 and EUstage 3A emission regulation.

Reliability You Can Depend On

When you have a tough job to do you need the power precision and flexibility of Mitsubishi D04FD-TAA engines.

It features major enhancements to make every piece of equipment work harder, smarter, quieter and longer.

The high Pressure Common Rail Fuel System provides enhanced engine performance with higher torque and better throttle response at every rpm without compromising fuel economy.

The Mitsubishi D04FD-TAA engine is based on the highly successful Mitsubishi SK series engines.
These engines combine proven full authority electronic controls with reliable performance you expect from one of the most successful and durable engine design.

Increased Higher Performance

Strong and Stable Lower Frame

Reinforced box-section frame is all welded, low-stress, high-strength steel.
It guarantees safety and resistance against external impact when driving on rough ground and working on wet sites through high tensile strength steel panels, with highly durable upper and lower rollers and track guards. Long undercarriage incorporates heavy duty excavator style components.
X-leg type center frame is integrally welded for maximum strength and durability.

Track Rail Guide & Adjusters

Durable track rail guides keep track links in place. Track adjustment is made easy with standard grease cylinder track adjusters and shock absorbing springs. (Full Track Guide : Option)

Reinforced Bucket and Bucket Linkage

Sealed and adjustable bucket linkage provides less wear of pins and bushes as well as silent operation.The design includes bucket link durability and anti wear characteristics.
Additional reinforcement plates on cutting edge section. Reinforced bucket is made with thicker steel and additional lateral plate.

Powerful and Preciser Swing Control

Improved shock absorbing characteristics make stopping a precise and smooth action

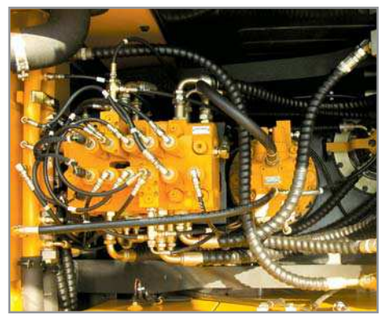

Courtesy of Machine.Market

Full Open Doors and Master Key System Provide Easy Access for Servicing.

Reliability & Serviceability

Side Cover with Left & Right Swing Open Type

Easy access to vital components gives unrestricted view of component allows easy maintenance and repair.

Easy to Maintain Engine Components

The cooling and preheating system are provided for optimum and immediate operation, guaranteeing longer life for the engine and hydraulic components.
Servicing of the engine and hydraulics is considerably simplified due to total accessibility.

Centralized Electric Control Box and Easy to Change Air Cleaner Assembly

Electric control box and Air cleaner are centralized in one or the same compartment for easy service.

Highly Efficient Hydraulic Pump

Pump output capacity has been increased.

Large Tool Box for Extra Storage

Durability of structure proven through FEM(Finite Element Method) analysis and long term durability test.

Courtesy of Machine.Market

Specifications

Engine

Model			Mitsubishi D04FD-TAA
Type			Water cooled, 4 cycle diesel, 4-cylinders in line, direct injection turbocharged and charge air cooled
Rated flywheel horse power	SAE	J1995 (gross)	119 HP (89 kW) at 2,000 rpm
		J1349 (net)	105 HP (78 kW) at 2,000 rpm
	DIN	6271/1 (gross)	121 PS (89 kW) at 2,000 rpm
		6271/1 (net)	106 PS (78 kW) at 2,000 rpm
Max. torque			45.4 kgf·m(328.38 lbf·ft) at 1,700 rpm
Bore x stroke			102 x 130 mm (4.01″ x 5.12″)
Piston			4,249 cc (259.3 in³)
Batteries			2 x 12 V x 80 AH
Starting motor			24 V- 5.0kW
Alternator			24V-50 Amp

Hydraulic system

Main pump	
Type	Two variable displacement piston pumps
Rated flow	2 x 130 ℓ/min (34.3 US gpm / 28.6 UK gpm)
Sub-pump for pilot circuit	Gear pump
Cross-sensing and fuel saving pump system	
Hydraulic motors	
Travel	Two speed axial piston motor with brake valve and parking brake
Swing	Axial piston motor with automatic brake
Relief valve setting	
Implement circuits	330 kgf/cm² (4,690 psi)
Travel	330 kgf/cm² (4,690 psi)
Power boost (boom, arm, bucket)	360 kgf/cm² (5,120 psi)
Swing circuit	240 kgf/cm² (3,410 psi)
Pilot circuit	35 kgf/cm² (500 psi)
Service valve	Installed
Hydraulic cylinders	
No. of cylinder-bore x stroke	Boom : 2-105 x 1,075 mm (4.1″ x 42.3″)
	Arm : 1-115 x 1,188 mm (4.5″ x 46.8″)
	Bucket : 1-100 x 855 mm (3.9″ x 33.7″)
	Blade : 2-100 x 270 mm (3.9″ x 10.6″)
	2-PCS boom : 2-105 x 975 mm (4.1″ x 38.4″)
	Adjust(boom) : 1-145 x 610 mm (5.7″ x 24.0″)

Drives & Brakes

Drive method	Fully hydrostatic type
Drive motor	Axial piston motor, in-shoe design
Reduction system	Planetary reduction gear
Max. drawbar pull	13,300 kgf (29,320 lbf)
Max. travel speed(high) / (low)	5.1 km/hr (3.3 mph) / 3.3 km/hr (2.1 mph)
Gradeability	35°(70 %)
Parking brake	multi wet disc

Control

Pilot pressure operated joysticks and pedals with detachable lever provide almost effortless and fatigueless operation.

Pilot control	Two joysticks with one safety lever (LH): Swing and arm, (RH): Boom and bucket(ISO)
Traveling and steering	Two levers with pedals
Engine throttle	Electric, Dial type
External Lights	Two lights mounted on the boom one under the battery box

Swing system

Swing motor	Axial piston motor
Swing reduction	Planetary gear reduction
Swing circuit lubrication	Grease-bathed
Swing brake	multi wet disc
Swing speed	13.1 rpm

Coolant & Lubricant capacity

(refilling)	liter	US gal	UK gal
Fuel tank	270.0	71.3	59.4
Engine coolant	22.0	5.8	4.8
Engine oil	17.5	4.6	3.8
Swing device-gear oil	2.5	0.66	0.55
Final drive(each)-gear oil	3.0	0.79	0.66
Hydraulic system(including tank)	210.0	55.5	46.2
Hydraulic tank	124.0	32.8	27.3

Undercarriage

X-leg type center frame is integrally welded with reinforced box-section track frames. The undercarriage includes lubricated rollers, idlers, track adjusters with shock absorbing spring and sprocket, and track chain with double or triple grouser shoes.

Description	R140LC-7A/R140LCD-7A	R140LCM-7A
Center frame	X - leg type	
Track frame	Pentagonal box type	
No. of shoes on each side	46	47
No. of carrier roller on each side	1	2
No. of track roller on each side	7	7
No. of rail guides on each side	1	1

Operating weight (approximate)

Operating weight, including 4.6m (15′ 1″) One-piece boom, 2.5m (8′ 2″) arm, SAE heaped 0.58 m³ (0.76 yd³) backhoe bucket, lubricant, coolant, and full fuel tank, hydraulic tank and the standard equipment.

Major component weight	
Upperstructure	3,620kg (7,980 lb)
Counterweight	2,200kg (4,850 lb)
4.6m (15′ 1″)boom(with arm cylinder)	1,030kg (2,270 lb)

Operating weight

Shoes(Triple grouser) mm (in)		Operating weight kg (lb)	Ground pressure kgf/cm²(psi)
500 (20″)	R140LC-7A	13,790 (30,400)	0.43 (6.11)
	R140LCD-7A	14,590 (32,160)	0.45 (6.40)
※600 (24″)	**R140LC-7A**	**13,980 (30,820)**	**0.36 (5.12)**
	R140LCD-7A	14,800 (32,630)	0.38 (5.40)
700 (28″)	R140LC-7A	14,210 (31,330)	0.32 (4.55)
800 (31″)	R140LCM-7A	16,880 (37,210)	0.32 (4.55)
＊710 (28″)	R140LCM-7A	16,880 (37,210)	0.32 (4.55)

※Standard equipment ＊Double grouser

Backhoe Attachment

Buckets

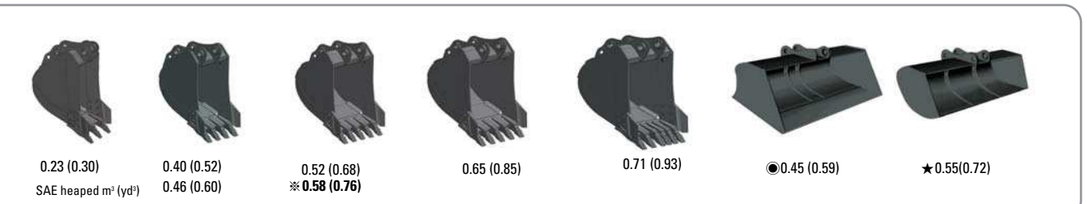

Capacity m³ (yd³)		Width mm (in)		Weight kg(lb)	Recommendation mm(ft·in)								
					Boom	※4.6 (15′ 1″)				4.1 (13′ 5″)		4.9(16′1″)Adjustable boom		
SAE heaped	CECE heaped	Without side cutters	With side cutters		Arm	1.9 (6′ 3″)	2.1 (6′ 11″)	2.5 (8′ 2″)	3.0 (9′ 10″)	1.9 (6′ 3″)	2.1 (6′ 11″)	1.9 (6′ 3″)	2.1 (6′ 11″)	2.5 (8′ 2″)
0.23 (0.30)	0.20(0.26)	520(20.5)	620(24.4)	335(740)		●	●	●	■	●	●	●	●	●
0.40 (0.52)	0.35(0.46)	760(29.9)	860(33.9)	410(900)		●	●	●	■	●	●	●	●	●
0.46 (0.60)	0.40(0.52)	850(33.5)	950(37.4)	435(960)		●	●	●	▲	●	●	●	●	■
0.52 (0.68)	0.45(0.59)	935(36.8)	1,035(40.8)	460(1,010)		●	●	●	–	●	●	●	■	■
※0.58 (0.76)	**0.50(0.65)**	**1,030(40.6)**	**1,130(44.5)**	**480(1,060)**		●	●	■	–	●	●	■	▲	▲
0.65 (0.85)	0.55(0.72)	1,110(43.7)	1,210(47.6)	500(1,100)		■	■	▲	–	●	■	▲	▲	–
0.71 (0.93)	0.60(0.78)	1,205(47.4)	-	540(1,190)		▲	▲	–	–	■	▲	▲	–	–
◉0.45 (0.59)	0.40(0.52)	1,520(59.8)	-	410(900)		●	●	■	–	●	●	■	■	▲
★0.55 (0.72)	0.45(0.59)	1,800(70.9)	-	585(1,290)		■	■	▲	–	●	●	■	▲	▲

※: Standard backhoe bucket
◉: Slope finishing bucket
★: Ditching bucket

●: Applicable for materials with density of 2,000 kg / m³ (3,370 lb/ yd³) or less
■: Applicable for materials with density of 1,600 kg / m³ (2,700 lb/ yd³) or less
▲: Applicable for materials with density of 1,100 kg / m³ (1,850 lb/ yd³) or less

Arms

Boom and arms are of all-welded, low-stress, full-box section design. 4.6m(15′ 1″), 4.1m(13′ 5″) mono boom and 4.9m(16′ 1″) adjustable boom and 1.90m(6′ 3″), 2.10m(6′ 11″), 2.50m(8′ 2″),3.00m(9′ 10″) arms are available. Buckets are all-welded, high-strength steel implements.

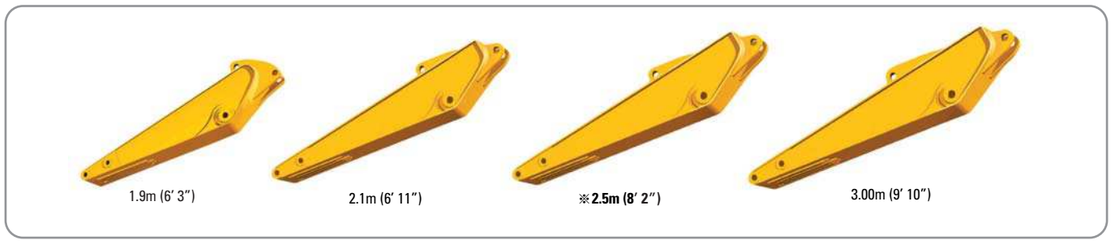

Digging force

Arm	Length	m(ft.in)	1.90 (6′ 3″)	2.10 (6′ 11″)	※2.50 (8′ 2″)	3.00 (9′ 10″)	Remark
	Weight	kg(lb)	560 (1230)	580 (1280)	**610 (1340)**	670 (1480)	
Bucket digging force	SAE	kN kgf lbf	83.4 [91] 8,500 [9,270] 18,740 [20,440]	83.4 [91] 8,500 [9,270] 18,740 [20,440]	**83.4 [91]** **8,500 [9,270]** **18,740 [20,440]**	83.4 [91] 8,500 [9,270] 18,740 [20,440]	[ ]: Power Boost
	ISO	kN kgf lbf	96.1 [104.8] 9,800 [10,690] 21,610 [23,570]	96.1 [104.8] 9,800 [10,690] 21,610 [23,570]	**96.1 [104.8]** **9,800 [10,690]** **21,610 [23,570]**	96.1 [104.8] 9,800 [10,690] 21,610 [23,570]	
Arm crowd force	SAE	kN kgf lbf	74.5 [81.3] 7,600 [8,290] 16,760 [18,280]	71.6 [78.1] 7,300 [7,960] 16,090 [17,550]	**61.8 [67.4]** **6,300 [6,870]** **13,890 [15,150]**	53.9 [59.0] 5,500 [6,020] 12,130 [13,270]	
	ISO	kN kgf lbf	78.5 [85.6] 8,000 [8,730] 17,640 [19,240]	75.5 [82.4] 7,700 [8,400] 16,980 [18,520]	**64.7 [70.6]** **6,600[7,200]** **14,550 [15,870]**	56.9 [62.1] 5,800 [6,330] 12,790 [13,950]	

Note : Arm weight including bucket cylinder and linkage. ※Standard arm

Courtesy of Machine.Market

Dimensions & Working Ranges

Dimensions R140LC-7A

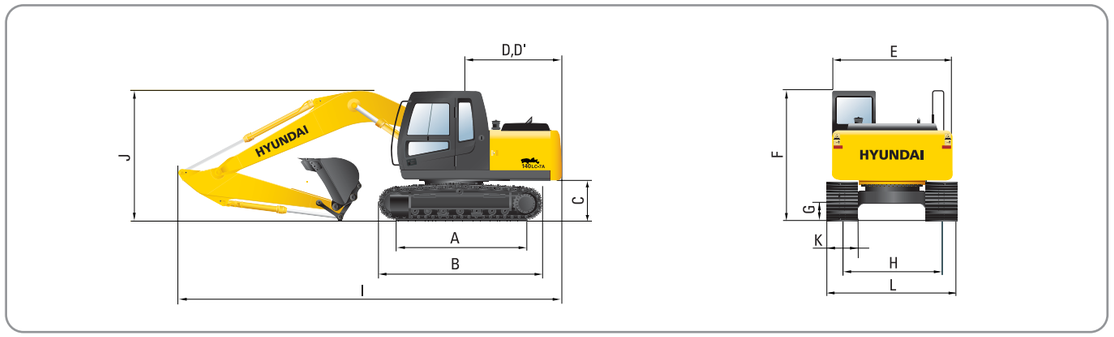

mm (ft · in)

A	Tumbler distance	3,000 (9′ 10″)
B	Overall length of crawler	3,750 (12′ 4″)
C	Ground clearance of counterweight	935 (3′ 1″)
D	Tail swing radius	2,310 (7′ 7″)
D′	Rear-end length	2,280 (7′ 6″)
E	Overall width of upperstructure	2,500 (8′ 2″)
F	Overall height of cab	2,820 (9′ 3″)
G	Min. ground clearance	440 (1′ 5″)
H	Track gauge	2,000 (6′ 7″)

mm (ft · in)

	Boom length	※4,600 (15′ 1″)				※4,100 (13′ 5″)	
	Arm length	1,900 (6′ 3″)	2,100 (6′ 11″)	**※2,500 (8′ 2″)**	3,000 (9′ 10″)	1,900 (6′ 3″)	2,100 (6′ 11″)
I	Overall length	7,810 (25′ 7″)	7,830 (25′ 8″)	**7,800 (25′ 7″)**	7,740 (25′ 5″)	7,310 (24′ 0″)	7,330 (24′ 6″)
J	Overall height of boom	2,640 (8′ 8″)	2,750 (9′ 0″)	**2,760 (9′ 1″)**	3,070 (10′ 1″)	2,680 (8′ 10″)	2,820 (9′ 3″)

K	Track shoe width	500 (20″)	**※600 (24″)**	700 (28″)
L	Overall width	2,500 (8′ 2″)	**2,600 (8′ 6″)**	2,700 (8′ 10″)

※Standard equipment

Dimensions R140LC-7A Adjustable boom

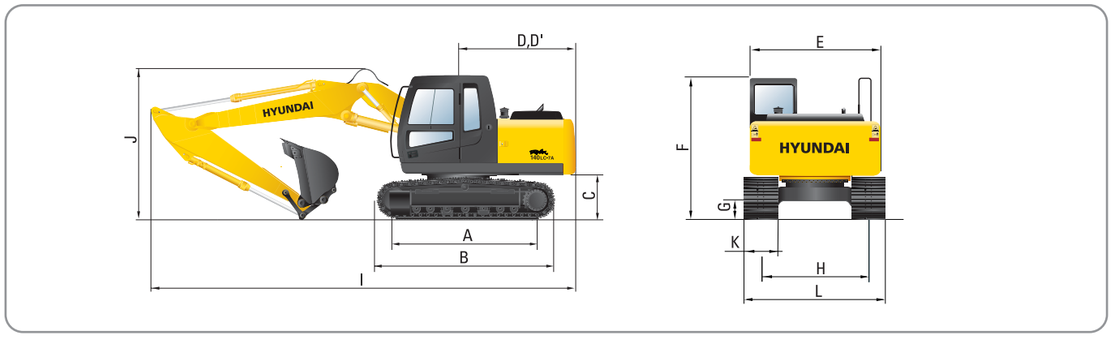

mm (ft · in)

A	Tumbler distance	3,000 (9′ 10″)
B	Overall length of crawler	3,750 (12′ 4″)
C	Ground clearance of counterweight	935 (3′ 1″)
D	Tail swing radius	2,310 (7′ 7″)
D′	Rear-end length	2,280 (7′ 6″)
E	Overall width of upperstructure	2,500 (8′ 2″)
F	Overall height of cab	2,820 (9′ 3″)
G	Min. ground clearance	440 (1′ 5″)
H	Track gauge	2,000 (6′ 7″)

mm (ft · in)

	Boom length	4,900 (16′ 1″), Adjustable boom		
	Arm length	1,900 (6′ 3″)	2,100 (6′ 11)	2,500 (8′ 2″)
I	Overall length	8,140 (26′ 8″)	8,140 (26′ 8″)	8,120 (26′ 8″)
J	Overall height of boom	2,820 (9′ 3″)	2,920 (9′ 7″)	2,940 (9′ 8″)

K	Track shoe width	500 (19.7″)	600 (23.6″)	700 (27.6″)
L	Overall width	2,500 (8′ 2″)	2,600 (8′ 6″)	2,700 (8′ 10″)

Working ranges

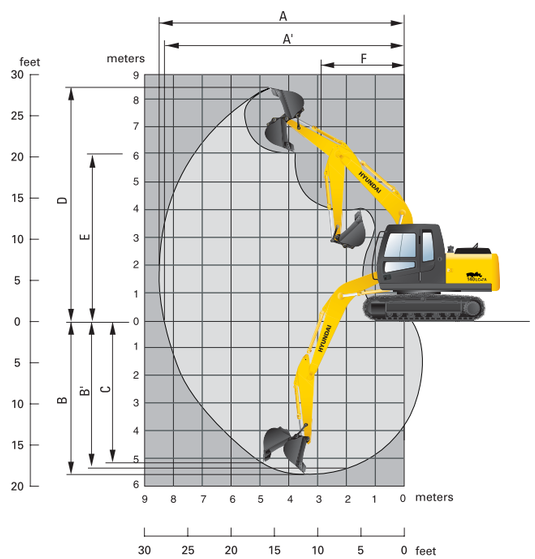

mm (ft · in)

	Boom length	※4,600 (15′ 1″)				※4,100 (13′ 5″)	
	Arm length	1,900 (6′ 3″)	2,100 (6′ 11″)	**※2,500 (8′ 2″)**	3,000 (9′ 10″)	1,900 (6′ 3″)	2,100 (6′ 11″)
A	Max. digging reach	7,750 (25′ 5″)	7,920 (26′ 0″)	**8,340 (27′ 4″)**	8,800 (28′ 10″)	7,250 (23′ 9″)	7,420 (24′ 4″)
A′	Max. digging reach on ground	7,600 (24′ 11″)	7,780 (25′ 6″)	**8,200 (26′ 11″)**	8,670 (28′ 5″)	7,100 (23′ 4″)	7,270 (23′ 10″)
B	Max. digging depth	5,000 (16′ 5″)	5,200 (17′ 1″)	**5,600 (18′ 4″)**	6,100 (20′ 0″)	4,570 (15′ 0″)	4,770 (15′ 8″)
B′	Max. digging depth(8′ level)	4,730 (15′ 6″)	4,950 (16′ 3″)	**5,390 (17′ 8″)**	5,910 (19′ 5″)	4,310 (14′ 2″)	4,520 (14′ 10″)
C	Max. vertical wall digging depth	4,460 (14′ 8″)	4,590 (15′ 1″)	**5,120 (16′ 10″)**	5,660 (18′ 7″)	4,090 (14′ 5″)	4,220 (13′ 10″)
D	Max. digging height	8,060 (26′ 5″)	8,140 (26′ 8″)	**8,520 (27′ 11″)**	8,730 (28′ 8″)	7,660 (25′ 2″)	7,730 (25′ 4″)
E	Max. dumping height	5,630 (18′ 6″)	5,710 (18′ 9″)	**6,080 (19′ 11″)**	6,280 (20′ 7″)	5,220 (17′ 2″)	5,290 (17′ 4″)
F	Min. swing radius	2,620 (8′ 7″)	2,680 (8′ 10″)	**2,620 (8′ 7″)**	2,660 (8′ 9″)	2,350 (7′ 9″)	2,470 (8′ 1″)

※Standard Equipment

Working ranges

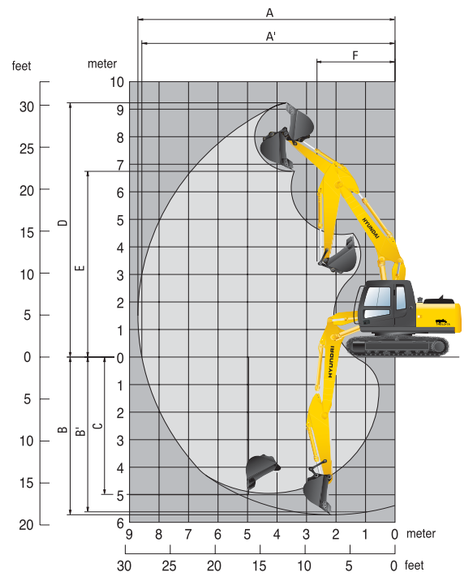

mm (ft · in)

	Boom length	4,900 (16′ 1″), Adjustable boom		
	Arm length	1,900 (6′ 3″)	2,100 (6′ 11″)	2,500 (8′ 2″)
A	Max. digging reach	8,140 (26′ 8″)	8,310 (27′ 3″)	8,720 (28′ 7″)
A′	Max. digging reach on ground	8,000 (26′ 3″)	8,180 (26′ 10″)	8,590 (28′ 2″)
B	Max. digging depth	5,140 (16′ 10″)	5,340 (17′ 6″)	5,740 (18′ 10″)
B′	Max. digging depth(8′ level)	5,020 (16′ 6″)	5,220 (17′ 2″)	5,630 (18′ 6″)
C	Max. vertical wall digging depth	4,380 (14′ 4″)	4,560 (15′ 0″)	5,000 (16′ 5″)
D	Max. digging height	8,770 (28′ 9″)	8,870 (29′ 1″)	9,230 (30′ 3″)
E	Max. dumping height	6,280 (20′ 7″)	6,390 (21′ 0″)	6,740 (22′ 1″)
F	Min. swing radius	2,660 (8′ 9)	2,800 (9′ 2″)	2,670 (8′ 9″)

Courtesy of Machine.Market

Dimensions & Working Ranges

Dimensions R140LCD-7A

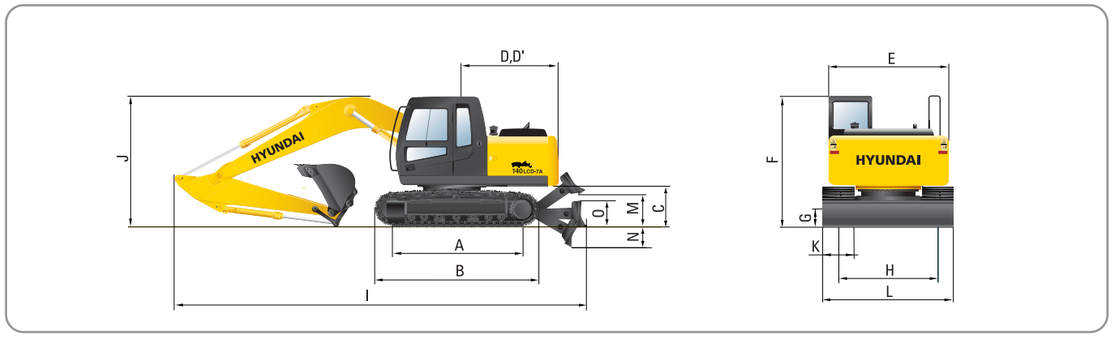

mm (ft · in)

A	Tumbler distance	3,000 (9′ 10″)
B	Overall length of crawler	3,750 (12′ 4″)
C	Ground clearance of counterweight	935 (3′ 1″)
D	Tail swing radius	2,310 (7′ 7″)
D′	Rear-end length	2,280 (7′ 6″)
E	Overall width of upperstructure	2,500 (8′ 2″)
F	Overall height of cab	2,820 (9′ 3″)
G	Min. ground clearance	440 (1′ 5″)
H	Track gauge	2,000 (6′ 7″)
M	Ground clearance of blade up	625 (2′ 1″)
N	Depth of blade down	515 (1′ 8″)
O	Height of blade	550 (1′ 10″)
	Width of blade	2,500 (8′ 2″) 2,600 (8′ 6″)

mm (ft · in)

	Boom length	※4,600 (15′ 1″)				※4,100 (13′ 5″)	
	Arm length	1,900 (6′ 3″)	2,100 (6′ 11″)	**※2,500 (8′ 2″)**	3,000 (9′ 10″)	1,900 (6′ 3″)	2,100 (6′ 11″)
I	Overall length	8,220 (27′ 0″)	8,240 (27′ 0″)	**8,210 (26′ 11″)**	8,150 (26′ 9″)	7,720 (25′ 4″)	7,740 (25′ 5″)
J	Overall height of boom	2,640 (8′ 8″)	2,750 (9′ 0″)	**2,760 (9′ 1″)**	3,070 (10′ 1″)	2,680 (8′ 10″)	2,820 (9′ 3″)

K	Track shoe width	500 (20″)	**※600 (24″)**	700 (28″)
L	Overall width	2,500 (8′ 2″)	**2,600 (8′ 6″)**	2,700 (8′ 10″)

※Standard equipment

Working ranges

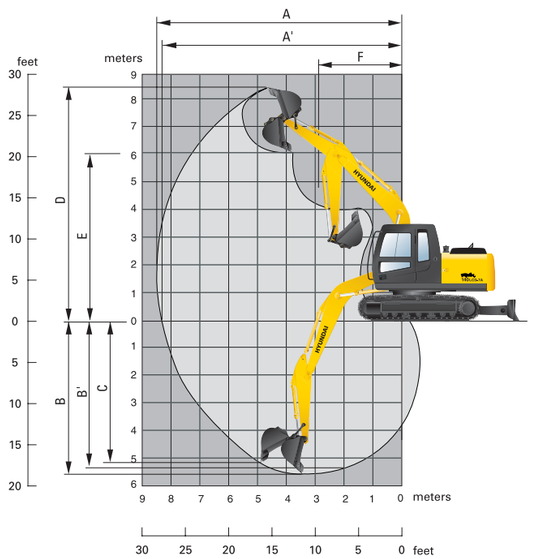

mm (ft · in)

	Boom length	※4,600 (15′ 1″)				※4,100 (13′ 5″)	
	Arm length	1,900 (6′ 3″)	2,100 (6′ 11″)	**※2,500 (8′ 2″)**	3,000 (9′ 10″)	1,900 (6′ 3″)	2,100 (6′ 11″)
A	Max. digging reach	7,750 (25′ 5″)	7,920 (26′ 0″)	**8,340 (27′ 4″)**	8,800 (28′ 10″)	7,250 (23′ 9″)	7,420 (24′ 4″)
A′	Max. digging reach on ground	7,600 (24′ 11″)	7,780 (25′ 6″)	**8,200 (26′ 11″)**	8,670 (28′ 5″)	7,100 (23′ 4″)	7,270 (23′ 10″)
B	Max. digging depth	5,000 (16′ 5″)	5,200 (17′ 1″)	**5,600 (18′ 4″)**	6,100 (20′ 0″)	4,570 (15′ 0″)	4,770 (15′ 8″)
B′	Max. digging depth(8′ level)	4,730 (15′ 6″)	4,950 (16′ 3″)	**5,390 (17′ 8″)**	5,910 (19′ 5″)	4,310 (14′ 2″)	4,520 (14′ 10″)
C	Max. vertical wall digging depth	4,460 (14′ 8″)	4,590 (15′ 1″)	**5,120 (16′ 10″)**	5,660 (18′ 7″)	4,090 (14′ 5″)	4,220 (13′ 10″)
D	Max. digging height	8,060 (26′ 5″)	8,140 (26′ 8″)	**8,520 (27′ 11″)**	8,730 (28′ 8″)	7,660 (25′ 2″)	7,730 (25′ 4″)
E	Max. dumping height	5,630 (18′ 6″)	5,710 (18′ 9″)	**6,080 (19′ 11″)**	6,280 (20′ 7″)	5,220 (17′ 2″)	5,290 (17′ 4″)
F	Min. swing radius	2,620 (8′ 7″)	2,680 (8′ 10″)	**2,620 (8′ 7″)**	2,660 (8′ 9″)	2,350 (7′ 9″)	2,470 (8′ 1″)

※Standard Equipment

Dimensions R140LCM-7A

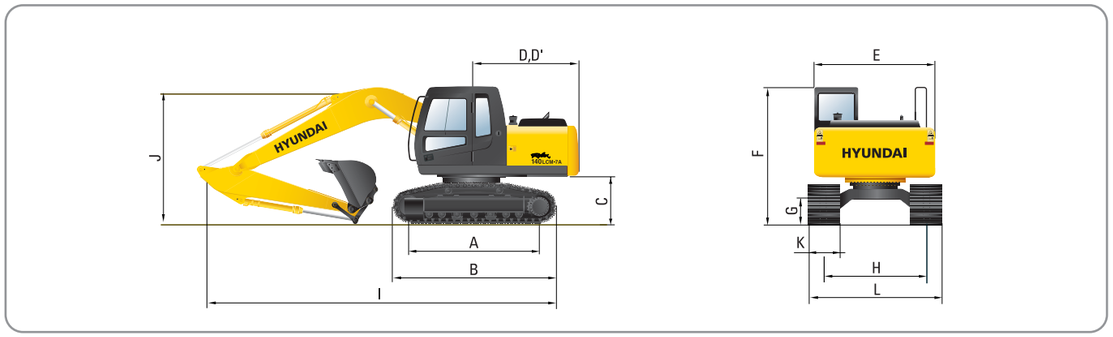

mm (ft · in)

A	Tumbler distance	3,030 (9′ 11″)
B	Overall length of crawler	3,860 (12′ 4″)
C	Ground clearance of counterweight	1,195 (3′ 11″)
D	Tail swing radius	2,310 (7′ 7″)
D′	Rear-end length	2,280 (7′ 6″)
E	Overall width of upperstructure	2,500 (8′ 2″)
F	Overall height of cab	3,080 (10′ 1″)
G	Min. ground clearance	600 (2′ 0″)
H	Track gauge	2,040 (6′ 8″)

mm (ft · in)

	Boom length	※4,600 (15′ 1″)			
	Arm length	1,900 (6′ 3″)	2,100 (6′ 11)	**※2,500 (8′ 2″)**	3,000 (9′ 10″)
I	Overall length	7,760 (25′ 6″)	7,810 (25′ 7″)	**7,770 (25′ 6″)**	7,810 (25′ 7″)
J	Overall height of boom	2,740 (8′ 12″)	2,850 (9′ 4″)	**2,810 (9′ 3″)**	3,080 (10′ 1″)

K	Track shoe width	**※800 (31″)**
L	Overall width	**2,840 (9′ 4″)**

※Standard Equipment

Working ranges

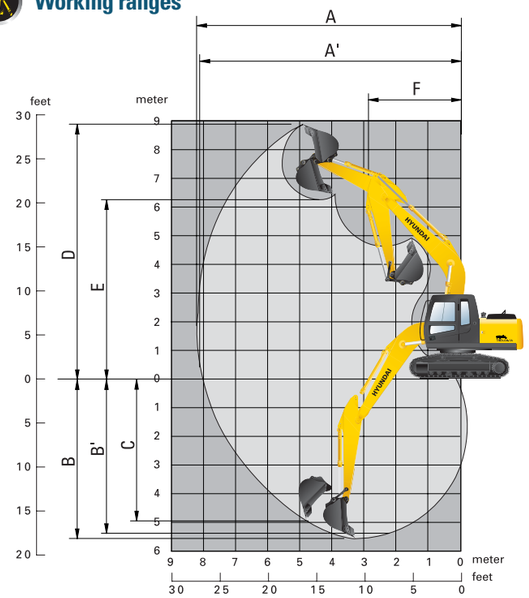

mm (ft · in)

	Boom length	※4,600 (15′ 1″)			
	Arm length	1,900 (6′ 3″)	2,100 (6′ 11″)	**2,500 (8′ 2″)**	3,000 (9′ 10″)
A	Max. digging reach	7,750 (25′ 5″)	7,920 (26′ 0″)	**8,340 (27′ 4″)**	8,800 (28′ 10″)
A′	Max. digging reach on ground	7,540 (24′ 9″)	7,720 (25′ 4″)	**8,130 (26′ 8″)**	8,600 (28′ 3″)
B	Max. digging depth	4,700 (15′ 5″)	4,900 (16′ 1″)	**5,300 (17′ 5″)**	5,800 (19′ 0″)
B′	Max. digging depth(8′ level)	4,440 (14′ 7″)	4,650 (15′ 3″)	**5,100 (16′ 9″)**	5,620 (18′ 5″)
C	Max. vertical wall digging depth	4,180 (13′ 9″)	4,310 (14′ 2″)	**4,840 (15′ 11″)**	5,380 (17′ 8″)
D	Max. digging height	8,340 (27′ 4″)	8,410 (27′ 7″)	**8,740 (28′ 8″)**	9,010 (29′ 7″)
E	Max. dumping height	5,900 (19′ 4″)	5,980 (19′ 7″)	**6,300 (20′ 8″)**	6,560 (21′ 6″)
F	Min. swing radius	2,620 (8′ 7″)	2,680 (8′ 10″)	**2,620 (8′ 7″)**	2,660 (8′ 9″)

※Standard Equipment

Courtesy of Machine.Market

Lifting Capacities

Lifting capacities R140LC-7A

Rating over-front | Rating over-side or 360 degree

• **Boom :** 4.6 m (15′ 1″) • **Arm :** 1.9 m (6′ 3″) • **Bucket :** 0.58 m³ (0.76 yd³) SAE heaped • **Shoe :** 600 mm(24″) triple grouser shoe with 2,200 kg (4,850 lb) Counterweight

Load point height m(ft)		Load radius 1.5 m(5.0 ft)		3.0 m(10.0 ft)		4.5 m(15.0 ft)		6.0 m(20.0 ft)		At max. reach Capacity		Reach
												m (ft)
6.0 m	kg					*3160	*3160			*2910	2370	5.95
20.0 ft	lb					***6970**	***6970**			***6420**	**5220**	**(19.5)**
4.5 m	kg					*3330	*3330			2840	1770	6.90
15.0 ft	lb					***7340**	***7340**			**6260**	**3900**	**(22.6)**
3.0m	kg			*5940	*5940	*4140	3530	3500	2180	2490	1530	7.37
10.0 ft	lb			***13100**	***13110**	***9130**	**7780**	**7720**	**4810**	**5490**	**3370**	**(24.2)**
1.5 m	kg			*8030	6070	*5130	3280	3390	2080	2400	1460	7.45
5.0 ft	lb			***17700**	**13380**	***11310**	**7230**	**7470**	**4590**	**5290**	**3220**	**(24.4)**
Ground	kg			*8200	5840	5230	3120	3310	2010	2530	1530	7.17
Line	lb			***18080**	**12870**	**11530**	**6880**	**7300**	**4430**	**5580**	**3370**	**(23.5)**
-1.5 m	kg	*6840	*6840	*8910	5850	5170	3070			2980	1820	6.48
-5.0 ft	lb	***15080**	***15080**	***19640**	**12900**	**11400**	**6770**			**6570**	**4010**	**(21.3)**
-3.0 m	kg	*11210	*11210	*7580	6000	*5000	3140			3380	2700	5.15
-10.0 ft	lb	***24710**	***24710**	***16710**	**13230**	***11020**	**6920**			**7450**	**5950**	**(16.9)**

• **Boom :** 4.6 m (15′ 1″) • **Arm :** 2.5 m (8′ 2″) • **Bucket :** 0.58 m³ (0.76 yd³) SAE heaped • **Shoe :** 600 mm(24″) triple grouser shoe with 2,200 kg (4,850 lb) Counterweight

Load point height m(ft)		Load radius 1.5 m(5.0 ft)		3.0 m(10.0 ft)		4.5 m(15.0 ft)		6.0 m(20.0 ft)		At max. reach Capacity		Reach
												m (ft)
6.0 m	kg									*2580	1950	6.69
20.0 ft	lb									***5690**	**4300**	**(21.9)**
4.5 m	kg							*2710	2290	2460	1520	7.53
15.0 ft	lb							***5970**	**5050**	**5420**	**3350**	**(24.7)**
3.0m	kg			*4670	*4670	*3570	*3570	*3140	2210	2190	1330	7.95
10.0 ft	lb			***10300**	***10300**	***7870**	***7870**	***6920**	**4870**	**4830**	**2930**	**(26.1)**
1.5 m	kg			*7530	6300	*4670	3330	3410	2100	2110	1260	8.03
5.0 ft	lb			***16600**	**13890**	***10300**	**7340**	**7520**	**4630**	**4650**	**2780**	**(26.3)**
Ground	kg			*8620	5870	5240	3120	3300	1990	2200	1310	7.77
Line	lb			***19000**	**12940**	**11550**	**6880**	**7280**	**4390**	**4850**	**2890**	**(25.5)**
-1.5 m	kg	*5750	*5750	*9180	5780	5130	3030	3240	1950	2520	1520	7.15
-5.0 ft	lb	***12680**	***12680**	***20240**	**12740**	**11310**	**6680**	**7140**	**4300**	**5560**	**3350**	**(23.5)**
-3.0 m	kg	*8800	*8800	*8320	5860	5150	3050			*3250	2060	6.01
-10.0 ft	lb	***19400**	***19400**	***18340**	**12920**	**11350**	**6720**			***7170**	**4540**	**(19.7)**
-4.5 m	kg			*5950	*5950							
-15.0 ft	lb			***13120**	***13120**							

• **Boom :** 4.6 m (15′ 1″) • **Arm :** 3.0 m (9′ 10″) • **Bucket :** 0.58 m³ (0.76 yd³) SAE heaped • **Shoe :** 600 mm(24″) triple grouser shoe with 2,200 kg (4,850 lb) Counterweight

Load point height m(ft)		Load radius 1.5 m(5.0 ft)		3.0 m(10.0 ft)		4.5 m(15.0 ft)		6.0 m(20.0 ft)		7.5 m(25.0 ft)		At max. reach Capacity		Reach
														m (ft)
6.0 m	kg							*1810	*1810			*2320	1680	7.25
20.0 ft	lb							***3990**	***3990**			***5110**	**3700**	**(23.8)**
4.5 m	kg							*2420	2330			2200	1340	8.02
15.0 ft	lb							***5340**	**5140**			**4850**	**2950**	**(26.3)**
3.0m	kg					*3050	*3050	*2790	2240	*1580	1450	1970	1180	8.41
10.0 ft	lb					***6720**	***6720**	***6150**	**4940**	***3480**	**3200**	**4340**	**2600**	**(27.6)**
1.5 m	kg			*6540	6520	*4210	3390	*3340	2110	*2110	1400	1910	1120	8.49
5.0 ft	lb			***14420**	**14370**	***9280**	**7470**	***7360**	**4650**	***4650**	**3090**	**4210**	**2470**	**(27.9)**
Ground	kg			*8610	5940	*5230	3140	3290	1990	*2000	1350	1970	1160	8.25
Line	lb			***18980**	**13100**	***11530**	**6920**	**7250**	**4390**	***4410**	**2980**	**4340**	**2560**	**(27.1)**
-1.5 m	kg	*5250	*5250	*9200	5750	5110	300	3210	1910			2220	1310	7.67
-5.0 ft	lb	***11570**	***11570**	***20280**	**12680**	**11270**	**6610**	**7080**	**4210**			**4890**	**2890**	**(25.2)**
-3.0 m	kg	*7680	*7680	*8740	5760	5090	2980	3210	1920			2830	1710	6.64
-10.0 ft	lb	***16930**	***16930**	***19270**	**12700**	**11220**	**6570**	**7080**	**4230**			**6240**	**3770**	**(21.8)**
-4.5 m	kg	*11270	*11270	*7040	5950	*4460	3100							
-15.0 ft	lb	***24850**	***24850**	***15520**	**13120**	***9830**	**6830**							

NOTES
1. Lifting capacity are based on SAE J1097, ISO 10567.
2. Lifting capacity of the Robex Series does not exceed 75% of tipping load with the machine on firm, level ground or 87% of full hydraulic capacity.
3. The load point is a hook (standard equipment) located on the back of the bucket.
4. (*) indicates load limited by hydraulic capacity.

Lifting capacities R140LC-7A Adjustable boom

Rating over-front | Rating over-side or 360 degree

• **Boom :** 4.9 m (16′ 1″) Adjustable • **Arm :** 1.9 m (6′ 3″) • **Bucket :** 0.58 m³ (0.76 yd³) SAE heaped • **Shoe :** 600 mm(24″) triple grouser shoe with 2,200 kg (4,850 lb) Counterweight

Load point height m(ft)		Load radius 3.0 m(10.0 ft)		4.5 m(15.0 ft)		6.0 m(20.0 ft)		At max. reach Capacity		Reach
										m (ft)
6.0 m	kg			*2730	*2730			*2620	2030	6.45
20.0 ft	lb			***6020**	***6020**			***5780**	**4480**	**(21.2)**
4.5 m	kg			*3070	*3070	*2920	2230	2550	1550	7.32
15.0 ft	lb			***6770**	***6770**	***6440**	**4920**	**5620**	**3420**	**(24.0)**
3.0m	kg	*6070	*6070	*3930	3450	*3230	2140	2260	1350	7.76
10.0 ft	lb	***13380**	***13380**	***8660**	**7610**	***7120**	**4720**	**4980**	**2980**	**(25.5)**
1.5 m	kg			*4920	3170	3350	2020	2180	1290	7.84
5.0 ft	lb			***10850**	**6990**	**7390**	**4450**	**4810**	**2840**	**(25.7)**
Ground	kg	*5350	*5350	5130	3000	3250	1930	2280	1350	7.57
Line	lb	***11790**	***11790**	**11310**	**6610**	**7170**	**4250**	**5030**	**2980**	**(24.8)**
-1.5 m	kg	*8700	*5680	5080	2960	3230	1910	2650	1580	6.93
-5.0 ft	lb	***19180**	**12520**	**11200**	**6530**	**7120**	**4210**	**5840**	**3480**	**(22.7)**
-3.0 m	kg	*7700	5840	5170	3030					
-10.0 ft	lb	***16980**	**12870**	**11400**	**6680**					

• **Boom :** 4.9 m (16′ 1″) Adjustable • **Arm :** 2.1 m (6′ 11″) • **Bucket :** 0.58 m³ (0.76 yd³) SAE heaped • **Shoe :** 600 mm(24″) triple grouser shoe with 2,200 kg (4,850 lb) Counterweight

Load point height m(ft)		Load radius 3.0 m(10.0 ft)		4.5 m(15.0 ft)		6.0 m(20.0 ft)		At max. reach Capacity		Reach
										m (ft)
6.0 m	kg			*2530	*2530			*2520	1920	6.67
20.0 ft	lb			***5580**	***5580**			***5560**	**4230**	**(21.9)**
4.5 m	kg			*2890	*2890	*2790	2250	2440	1490	7.51
15.0 ft	lb			***6370**	***6370**	***6150**	**4960**	**5380**	**3280**	**(24.6)**
3.0m	kg	*5620	*5620	*3750	3480	*3120	2150	2170	1290	7.93
10.0 ft	lb	***12390**	***12390**	***8270**	**7670**	***6880**	**4740**	**4780**	**2840**	**(26.0)**
1.5 m	kg			*4770	3180	3350	2020	2100	1230	8.01
5.0 ft	lb			***10520**	**7010**	**7390**	**4450**	**4630**	**2710**	**(26.3)**
Ground	kg	*5630	5610	5120	2990	3240	1930	2190	1280	7.76
Line	lb	***12410**	**12370**	**11290**	**6590**	**7140**	**4250**	**4830**	**2820**	**(25.5)**
-1.5 m	kg	*8800	5630	5050	2930	3210	1890	2510	1490	7.13
-5.0 ft	lb	***19400**	**12410**	**11130**	**6460**	**7080**	**4170**	**5530**	**3280**	**(23.4)**
-3.0 m	kg	*7910	5770	5120	2990					
-10.0 ft	lb	***17440**	**12720**	**11290**	**6590**					

• **Boom :** 4.9 m (16′ 1″) Adjustable • **Arm :** 2.5 m (8′ 2″) • **Bucket :** 0.58 m³ (0.76 yd³) SAE heaped • **Shoe :** 600 mm(24″) triple grouser shoe with 2,200 kg (4,850 lb) Counterweight

Load point height m(ft)		Load radius 1.5 m(5.0 ft)		3.0 m(10.0 ft)		4.5 m(15.0 ft)		6.0 m(20.0 ft)		7.5 m(25.0 ft)		At max. reach Capacity		Reach
														m (ft)
6.0 m	kg							*2150	*2150			*2340	1680	7.17
20.0 ft	lb							***4740**	***4740**			***5160**	**3700**	**(23.5)**
4.5 m	kg					*2520	*2520	*2510	2290			2210	1330	7.95
15.0 ft	lb					***5560**	***5560**	***5530**	**5050**			**4870**	**2930**	**(26.1)**
3.0m	kg			*4770	*4770	*3400	*3400	*2880	2180	*1720	1410	1990	1170	8.35
10.0 ft	lb			***10520**	***10520**	***7500**	***7500**	***6350**	**4810**	***3790**	**3110**	**4390**	**2580**	**(27.4)**
1.5 m	kg			*6780	6010	*4480	3230	3370	2040	2310	1360	1920	1110	8.42
5.0 ft	lb			***14950**	**13250**	***9880**	**7120**	**7430**	**4500**	**5090**	**3000**	**4230**	**2450**	**(27.6)**
Ground	kg			*5900	5640	5140	3000	3240	1920	*2100	1320	2000	1160	8.18
Line	lb			***13010**	**12430**	**11330**	**6610**	**7140**	**4230**	***4630**	**2910**	**4410**	**2560**	**(26.8)**
-1.5 m	kg	*4660	*4660	*8160	5590	5040	2910	3180	1870			2260	1320	7.59
-5.0 ft	lb	***10270**	***10270**	***17990**	**12320**	**11110**	**6420**	**7010**	**4120**			**4980**	**2910**	**(24.9)**
-3.0 m	kg			*8290	5690	5060	2940	3220	1900					
-10.0 ft	lb			***18280**	**12540**	**11160**	**6480**	**7100**	**4190**					

NOTES
1. Lifting capacity are based on SAE J1097, ISO 10567.
2. Lifting capacity of the Robex Series does not exceed 75% of tipping load with the machine on firm, level ground or 87% of full hydraulic capacity.
3. The load point is a hook (standard equipment) located on the back of the bucket.
4. (*) indicates load limited by hydraulic capacity.

Courtesy of Machine.Market

Lifting capacities R140LCD-7A

Rating over-front | Rating over-side or 360 degree

• **Boom :** 4.6 m (15′ 1″) • **Arm :** 1.9 m (6′ 3″) • **Bucket :** 0.58 m³ (0.76 yd³) SAE heaped • **Shoe :** 600 mm(24″) triple grouser shoe with 2,200 kg (4,850 lb) Counterweight

Load point height m(ft)		Load radius 1.5 m(5.0 ft)		3.0 m(10.0 ft)		4.5 m(15.0 ft)		6.0 m(20.0 ft)		At max. reach Capacity		Reach
												m (ft)
6.0 m	kg					*3160	*3160			*2910	2510	5.95
20.0 ft	lb					***6970**	***6970**			***6420**	**5530**	**(19.5)**
4.5 m	kg					*3330	*3330			*3000	1890	6.90
15.0 ft	lb					***7340**	***7340**			***6610**	**4170**	**(22.6)**
3.0m	kg			*5940	*5940	*4140	3720	*3520	2310	2720	1630	7.37
10.0 ft	lb			***13100**	***13100**	***9130**	**8200**	***7760**	**5090**	**6000**	**3590**	**(24.2)**
1.5 m	kg			*8030	6410	*5130	3470	3690	2220	2620	1560	7.45
5.0 ft	lb			***17700**	**14130**	***11310**	**7650**	**8140**	**4890**	**5780**	**3440**	**(24.4)**
Ground	kg			*8200	6180	5670	3310	3610	2140	2760	1640	7.17
Line	lb			***18080**	**13620**	**12500**	**7300**	**7960**	**4720**	**6080**	**3620**	**(23.5)**
-1.5 m	kg	*6840	*6840	*8910	6190	5620	3260			3250	1940	6.48
-5.0 ft	lb	***15080**	***15080**	***19640**	**13650**	**12390**	**7190**			**7170**	**4280**	**(21.3)**
-3.0 m	kg	*11210	*11210	*7580	6340	*5000	3330			*3380	2860	5.15
-10.0 ft	lb	***24710**	***24710**	***16710**	**13980**	***11020**	**7340**			***7450**	**6310**	**(16.9)**

• **Boom :** 4.6 m (15′ 1″) • **Arm :** 2.5 m (9′ 10″) • **Bucket :** 0.58 m³ (0.76 yd³) SAE heaped • **Shoe :** 600 mm(24″) triple grouser shoe with 2,200 kg (4,850 lb) Counterweight

Load point height m(ft)		Load radius 1.5 m(5.0 ft)		3.0 m(10.0 ft)		4.5 m(15.0 ft)		6.0 m(20.0 ft)		At max. reach Capacity		Reach
												m (ft)
6.0 m	kg									*2580	2060	6.69
20.0 ft	lb									***5690**	**4540**	**(21.9)**
4.5 m	kg							*2710	2430	*2670	1620	7.53
15.0 ft	lb							***5970**	**5360**	***5890**	**3570**	**(24.1)**
3.0m	kg			*4670	*4670	*3570	*3570	*3140	2340	2400	1420	7.95
10.0 ft	lb			***10300**	***10300**	***7870**	***7870**	***3140**	**5160**	**5290**	**3130**	**(26.1)**
1.5 m	kg			*7530	6640	*4670	3520	*3620	2230	2320	1360	8.03
5.0 ft	lb			***16600**	**14640**	***10300**	**7760**	***7980**	**4920**	**5110**	**3000**	**(26.3)**
Ground	kg			*8620	6210	*5520	3310	3590	2130	2420	1410	7.77
Line	lb			***19000**	**13690**	***12170**	**7300**	**7910**	**4700**	**5340**	**3110**	**(25.5)**
-1.5 m	kg	*5750	*5750	*9180	6120	5580	3220	3540	2080	2760	1630	7.15
-5.0 ft	lb	***12680**	***12680**	***20240**	**13490**	**12300**	**7100**	**7800**	**4590**	**6080**	**3590**	**(23.5)**
-3.0 m	kg	*8800	*8800	*8320	6200	*5450	3240			*3250	2190	6.01
-10.0 ft	lb	***19400**	***19400**	***18340**	**13670**	***12020**	**7140**			***7170**	**4830**	**(19.7)**
-4.5 m	kg			*5950	*5950							
-15.0 ft	lb			***13120**	***13120**							

• **Boom :** 4.6 m (15′ 1″) • **Arm :** 3.0 m (9′ 10″) • **Bucket :** 0.58 m³ (0.76 yd³) SAE heaped • **Shoe :** 600 mm(24″) triple grouser shoe with 2,200 kg (4,850 lb) Counterweight

Load point height m(ft)		Load radius 1.5 m(5.0 ft)		3.0 m(10.0 ft)		4.5 m(15.0 ft)		6.0 m(20.0 ft)		7.5 m(25.0 ft)		At max. reach Capacity		Reach
														m (ft)
6.0 m	kg							*1810	*1810			*2320	1780	7.25
20.0 ft	lb							***3990**	***3990**			***5110**	**3920**	**(23.8)**
4.5 m	kg							*2420	*2420			2400	1430	8.02
15.0 ft	lb							***5340**	***5340**			**5290**	**3150**	**(26.3)**
3.0m	kg					*3050	*3050	*2790	2370	*1580	1550	2170	1260	8.41
10.0 ft	lb					***6720**	***6720**	***6150**	**5220**	***3480**	**3420**	**4780**	**2780**	**(27.6)**
1.5 m	kg			*6540	*6540	*4210	3580	*3340	2240	*2110	1500	2100	1210	8.49
5.0 ft	lb			***14420**	***14420**	***9280**	**7890**	***7360**	**4940**	***4650**	**3310**	**4630**	**2670**	**(27.9)**
Ground	kg			*8610	6280	*5230	3330	3590	2120	*2000	1450	2170	1250	8.25
Line	lb			***18980**	**13850**	***11530**	**7340**	**7910**	**4670**	***4410**	**3200**	**4780**	**2760**	**(27.1)**
-1.5 m	kg	*5250	*5250	*9200	6090	5560	3200	3510	2050			2440	1410	7.67
-5.0 ft	lb	***11570**	***11570**	***20280**	**13430**	**12260**	**7050**	**7740**	**4520**			**5380**	**3110**	**(25.2)**
-3.0 m	kg	*7680	*7680	*8740	6100	5530	3180	3510	2050			3090	1830	6.64
-10.0 ft	lb	***16930**	***16930**	***19270**	**13450**	**12190**	**7010**	**7740**	**4520**			**6810**	**4030**	**(21.8)**
-4.5 m	kg	*11270	*11270	*7040	6290	*4460	3290							
-15.0 ft	lb	***24850**	***24850**	***15520**	**13870**	***9830**	**7250**							

NOTES
1. Lifting capacity are based on SAE J1097, ISO 10567.
2. Lifting capacity of the Robex Series does not exceed 75% of tipping load with the machine on firm, level ground or 87% of full hydraulic capacity.
3. The load point is a hook (standard equipment) located on the back of the bucket.
4. (*) indicates load limited by hydraulic capacity.

Lifting capacities R140LCM-7A

Rating over-front | Rating over-side or 360 degree

• **Boom :** 4.6 m (15′ 1″) • **Arm :** 1.9 m (6′ 3″) • **Bucket :** 0.58 m³ (0.76 yd³) SAE heaped • **Shoe :** 800 mm(31″) triple grouser shoe with 2,200 kg (4,850 lb) Counterweight

Load point height m(ft)		Load radius 1.5 m(5.0 ft)		3.0 m(10.0 ft)		4.5 m(15.0 ft)		6.0 m(20.0 ft)		At max. reach Capacity		Reach
												m (ft)
6.0 m	kg									*2630	2230	6.87
20.0 ft	lb									***5800**	**4920**	**(22.5)**
4.5 m	kg					*2880	*2880	*2890	2740	*2730	1810	7.63
15.0 ft	lb					***6350**	***6350**	***6370**	**6040**	***6020**	**3990**	**(25.0)**
3.0m	kg			*5200	*5200	*3800	*3800	*3250	2650	2580	1630	7.99
10.0 ft	lb			***11460**	***11460**	***8380**	***8380**	***7170**	**5840**	**5690**	**3590**	**(26.2)**
1.5 m	kg			*7960	7390	*4880	3940	*3740	2530	2530	1590	8.01
5.0 ft	lb			***17550**	**16290**	***10760**	**8690**	***8250**	**5580**	**5580**	**3510**	**(26.3)**
Ground	kg	*3550	*3550	*8720	7030	*5660	3750	3890	2440	2670	1670	7.70
Line	lb	***7830**	***7830**	***19220**	**15500**	***12480**	**8270**	**8580**	**5380**	**5890**	**3680**	**(25.3)**
-1.5 m	kg	*6180	*6180	*9150	6980	*5870	3680	3850	2400	3100	1950	7.00
-5.0 ft	lb	***13620**	***13620**	***20170**	**15390**	***12940**	**8110**	**8490**	**5290**	**6830**	**4300**	**(23.0)**
-3.0 m	kg	*9400	*9400	*8100	7090	*5320	**3720**			*3260	2700	5.74
-10.0 ft	lb	***20720**	***20720**	***17860**	**15630**	***11730**	**8200**			***7190**	**5950**	**(18.8)**

• **Boom :** 4.6 m (15′ 1″) • **Arm :** 2.5 m (8′ 2″) • **Bucket :** 0.58 m³ (0.76 yd³) SAE heaped • **Shoe :** 800 mm(31″) triple grouser shoe with 2,200 kg (4,850 lb) Counterweight

Load point height m(ft)		Load radius 1.5 m(5.0 ft)		3.0 m(10.0 ft)		4.5 m(15.0 ft)		6.0 m(20.0 ft)		At max. reach Capacity		Reach
												m (ft)
6.0 m	kg									*2600	2200	6.87
20.0 ft	lb									***5730**	**4850**	**(22.5)**
4.5 m	kg					*2840	*2840	*2850	2710	*2690	1790	7.63
15.0 ft	lb					***6260**	***6260**	***6280**	**5970**	***5930**	**3950**	**(25.0)**
3.0m	kg			*5160	*5160	*3750	*3750	*3210	2610	2560	1600	7.99
10.0 ft	lb			***11380**	***11380**	***8270**	***8270**	***7080**	**5750**	**5640**	**3530**	**(26.2)**
1.5 m	kg			*7920	7350	*4840	3910	*3700	2500	2510	1560	8.01
5.0 ft	lb			***17460**	**16200**	***10670**	**8620**	***8160**	**5510**	**5530**	**3440**	**(26.3)**
Ground	kg	*3580	*3580	*8750	6990	*5620	3710	3850	2400	2650	1640	7.70
Line	lb	***7890**	***7890**	***19290**	**15410**	***12390**	**8180**	**8490**	**5290**	**5840**	**3620**	**(25.3)**
-1.5 m	kg	*6220	*6220	*9110	6940	*5830	3640	3810	2370	3070	1920	7.00
-5.0 ft	lb	***13710**	***13710**	***20080**	**15300**	***12850**	**8020**	**8400**	**5220**	**6770**	**4230**	**(23.0)**
-3.0 m	kg	*9430	*9430	*8060	7050	*5280	3680			*3230	2680	5.74
-10.0 ft	lb	***20790**	***20790**	***17770**	**15540**	***11640**	**8110**			***7120**	**5910**	**(18.8)**

• **Boom :** 4.6 m (15′ 1″) • **Arm :** 3.0 m (9′ 10″) • **Bucket :** 0.58 m³ (0.76 yd³) SAE heaped • **Shoe :** 800 mm(31″) triple grouser shoe with 2,200 kg (4,850 lb) Counterweight

Load point height m(ft)		Load radius 1.5 m(5.0 ft)		3.0 m(10.0 ft)		4.5 m(15.0 ft)		6.0 m(20.0 ft)		At max. reach Capacity		Reach
												m (ft)
6.0 m	kg									*2550	2170	6.87
20.0 ft	lb									***5620**	**4780**	**(22.5)**
4.5 m	kg					*2790	*2790	*2800	2670	*2650	1750	7.63
15.0 ft	lb					***6150**	***6150**	***6170**	**5890**	***5840**	**3860**	**(25.0)**
3.0m	kg			*5100	*5100	*3700	*3700	*3160	2570	2520	1560	7.99
10.0 ft	lb			***11240**	***11240**	***8160**	***8160**	***6970**	**5670**	**5560**	**3440**	**(26.2)**
1.5 m	kg			*7860	7300	*4790	3860	*3650	2450	2470	1520	8.01
5.0 ft	lb			***17330**	**16090**	***10560**	**8510**	***8050**	**5400**	**5450**	**3350**	**(26.3)**
Ground	kg	*3630	*3630	*8780	6940	*5560	3670	3800	2360	2610	1610	7.70
Line	lb	***8000**	***8000**	***19360**	**15300**	***12260**	**8090**	**8380**	**5200**	**5750**	**3550**	**(25.3)**
-1.5 m	kg	*6260	*6260	*9050	6880	*5780	3590	3760	2320	3040	1890	7.00
-5.0 ft	lb	***13800**	***13800**	***19950**	**15170**	***12740**	**7910**	**8290**	**5110**	**6700**	**4170**	**(23.0)**
-3.0 m	kg	*9470	*9470	*8000	6990	*5220	3630			*3190	2640	5.74
-10.0 ft	lb	***20880**	***20880**	***17640**	**15410**	***11510**	**8000**			***7030**	**5820**	**(18.8)**

NOTES
1. Lifting capacity are based on SAE J1097, ISO 10567.
2. Lifting capacity of the Robex Series does not exceed 75% of tipping load with the machine on firm, level ground or 87% of full hydraulic capacity.
3. The load point is a hook (standard equipment) located on the back of the bucket.
4. (*) indicates load limited by hydraulic capacity.

Courtesy of Machine.Market