KOMATSU®

FLYWHEEL HORSEPOWER
21.3 kW **29 HP** @2500 rpm

OPERATING WEIGHT
2,740 kg **6,040 lb**

WA30-5

Utility

WA
30-5

Utility

COMPACT WHEEL LOADER

Courtesy of Machine.Market

World Class Komatsu Quality

35 years of experience and technology is manufactured into every wheel loader. Komatsu's ISO certification and critical quality control ensure that every wheel loader will satisfy the most demanding customer. From design to production, from sales to service, Komatsu means total quality.

Easy Maintenance

Komatsu wheel loaders feature maintenance-free wet-disc brakes and easy opening engine covers to keep your operators productive and efficient.

Ergonomically Designed Operator Compartment

Outstanding visibility is achieved by positioning the operator above, not behind the load. This seating position allows the operator excellent bucket visibility for easy load placement. Dual entry and exit as well as conventional controls for ground drive and loader operations reduce operator fatigue and increase productivity.

Low Noise Operation

Sound suppression materials and air intake resonator are utilized in the engine area decreasing sound output which reduces operator stress and fatigue.

Hydrostatic Transmission

Speed and dynamic braking are controlled by a single pedal providing low effort machine operation. The forward/reverse lever is mounted within easy reach of the operator.

Rear Axle Oscillation

The Komatsu wheel loaders superior design offers continuous tire contact and traction assist over rough terrain for an easy ride.

Automatic Bucket Leveler

After dumping the bucket, the Komatsu wheel loader system has automatic return-to-dig function that improves cycle times.

Superior Stability

A long wheelbase, wide tread and rear axle oscillation result in a comfortable and stable ride in load and carry applications.

Courtesy of Machine.Market

ENGINE-EPA CERTIFIED

Model . . . . . Komatsu 3D84E-3B
Type . . . . . .Water cooled, 4-stroke cycle
Aspiration . . . . . .Natural
Number of cylinders 3
Bore x stroke . . . . . .84 mm x 86 mm **3.31" x 3.39"**
Piston displacement . . . . . .1.5 ltr. **91 cu. in.**
Governor . . . . . .Mechanical
Horsepower rating @ 2500 rpm
Flywheel horsepower . . . . . .21.3 kw **29 HP**

Meets EPA emissions regulations

Fuel system . . . . . .Direct Injection
Lubrication system
Method . . . . . .Gear pump, force-lubrication
Filter . . . . . .Full-flow
Air cleaner . . . . . .Dry-type with double elements & dust evacuator, plus dust indicator

TRANSMISSION

Drive Method . . . . . .Hydrostatic

Travel Speed*	Forward		Reverse	
	15.0 km/h	**9.3 mph**	15.0 km/h	**9.3 mph**

*Measured with 12.5/70-16-6 tires

AXLES AND FINAL DRIVES

Drive system . . . . . .Four wheel drive
Front . . . . . .Fixed, semi-floating
Rear . . . . . .Center-pin support semi-floating, 16° total oscillation
Reduction gear . . . . . .Spiral bevel gear
Final reduction gear . . . . . .Planetary gear, single reduction
Oscillating Angle . . . . . ± 16°

BRAKES

Service brake . . . . . .Hydraulically-activated, wet, sealed disc
Parking brake . . . . . .Mechanically-activated, wet, sealed disc
Tire size 12.5/70-16-6PR

STEERING SYSTEM

Type . . . . . .Full hydraulic power, center pivot steering
Steering angle . . . . . .40°
Minimum turning radius at the center of outside tire . . . . . .3060 mm **10'0"**

BOOM AND BUCKET

Z-bar loader linkage is designed for maximum rigidity and offers powerful breakout. Rap-out loader linkage design enables shock dumping for removing sticky materials.

BUCKET CONTROLS

Control positions

Boom . . . . . .Raise, hold, lower & float
Bucket . . . . . .Roll back, hold & dump

HYDRAULIC SYSTEM

Capacity (discharge flow) @ engine-rated rpm

Loader pump . . . . . .32 ltr/min **8.5 US gal/min**
Auxiliary hydraulic . . . . . 32 ltr/min **8.5 US gal/min**
(Gear-type pumps)

Relief valve setting
Loader . . . . . .210 bar **2990 psi**

Control valve

3-spool, open center type

Hydraulic cylinders

Loader and steering . . . . . .Double-acting, piston

Hydraulic Cylinders	Number of Cylinders	Bore		Stroke	
Boom	2	65 mm	**2.6"**	379 mm	**14.9"**
Bucket	1	60 mm	**2.4"**	367 mm	**14.4"**

Hydraulic cycle time (rated load in bucket)

Raise . . . . . .4.6 sec
Dump . . . . . .1.0 sec
Lower (empty) . . . . . .2.8 sec
Rollback . . . . . .1.4 sec

Total cycle time . . . . . .9.8 sec

SERVICE REFILL CAPACITIES

Cooling system . . . . . .5.5 ltr. **1.3 US gal.**
Fuel tank . . . . . .42.0 ltr. **11.9 US gal.**
Engine . . . . . .4.7 ltr. **1.24 US gal.**
Hydraulic reservoir . . . . . .28.0 ltr. **7.4 US gal.**
Axle (each, front and rear) . . . . . .9.3 ltr. **1.4 US gal.**

Standard Equipment

- Alarm, back-up
- Canopy, ROPS
- Directional signals
- Engine coolant temp. gauge
- Fuel gauge
- Head lights (two)
- Horn
- Hourmeter
- Hydraulic oil temp. gauge
- Rearview mirrors (two)
- Seat, adjustable
- Seat belt (3 in.)
- Tachometer
- Indicator Lights, for: battery, parking brake, engine pre-heat, engine oil pressure, hydraulic filter restriction

Optional Equipment

- Auxiliary hydraulics
- Mechanical front attachment coupler
- 66” Bucket
- 48” Pallet forks

Courtesy of Machine.Market

Dimensions

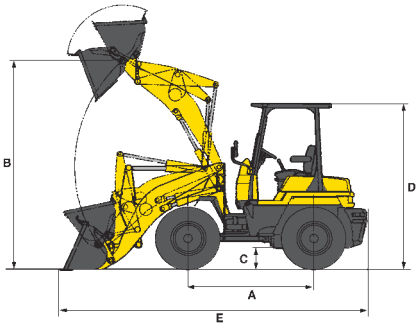

	Standard tires		12.5/70-16-6PR
	Tread (Front and rear)	1180 mm	**3'10"**
	Width over tires	1495 mm	**4'11"**
A	Wheelbase	1750 mm	**5'9"**
B	Hinge pin height, maximum height	2680 mm	**8'10"**
C	Ground clearance	270 mm	**10.6"**
D	Overall height, ROPS canopy	2460 mm	**8'1"**
E	Overall length	4030 mm	**13'3"**

Bucket		Pin-on Bucket with Bolt-on Cutting Edge		Attachment Coupler with Bolt-on Cutting Edge		Attachment Coupler with 48'' pallet forks	
Bucket capacity	SAE rated	0.4 m^3	**.52 yd^3**	.4 m^3	**.52 yd^3**	N/A	**N/A**
Bucket width		1575 mm	**5'2''**	1575 mm	**5'2''**	N/A	**N/A**
Bucket weight (48'' Pallet fork weight)		387 kg	**176 lb**	214 kg	**470 lb**	(172 kg)	**(378 lb)**
Static tipping load	Straight	1948 kg	**4,285 lb**	1714 kg	**3,771 lb**	1234 kg	**2,715 lb**
	Full turn (40°)	1694 kg	**3,727 lb**	1491 kg	**3,280 lb**	1074 kg	**2,363 lb**
Operating capacity - 50% of full turn tipping load		847 kg	**1,863 lb**	796 kg	**1,640 lb**	537 kg	**1,180 lb**
Dump clearance, maximum height and 45° dump angle		2140 mm	**7'0''**	2140 mm	**7'0''**	N/A	**N/A**
Reach at maximum height and 45° dump angle		785 mm	**2'7''**	785 mm	**2'7''**	N/A	**N/A**
Operating height	Fully raised	3375 mm	**11'1''**	3375 mm	**11'1''**	N/A	**N/A**
Turning radius*		3210 mm	**10'6''**	3210 mm	**10'6''**	N/A	**N/A**
Digging depth	10°	150 mm	**5.9''**	150 mm	**5.9''**	N/A	**N/A**
Breakout force		2700 kg	**5,950 lb**	2700 kg	**5,950 lb**	N/A	**N/A**
Operating weight		2740 kg	**6,040 lb**	2818 kg	**6,200 lb**	2773 kg	**6,100 lb**

N/A - Not applicable

- All dimensions, weights, and performance values based on SAE J732c and J742b standards. Static tipping load and operating weight shown include 12.5/70-16-6PR tires, lubricant, coolant, full fuel tank, ROPS canopy, and operator. Machine stability and operating weight are affected by counterweight, tire size, and other attachments.

* Turning radius measured with bucket at carry position, outside corner of bucket.

This specification sheet may contain attachments and optional equipment that are not available in your area. Please contact your local Komatsu Utility Corporation distributor for those items you may require. Materials and specifications are subject to change without notice.

Form No. KUSS107-02
© 2001 Komatsu
Printed in USA PLI (7.5M) PL

Printed in USA 0601

KOMATSU®
PO Box 8112 • Vernon Hills, IL 60061-8112
website: www.komatsuutility.com

Courtesy of Machine.Market