8CX·8CXi

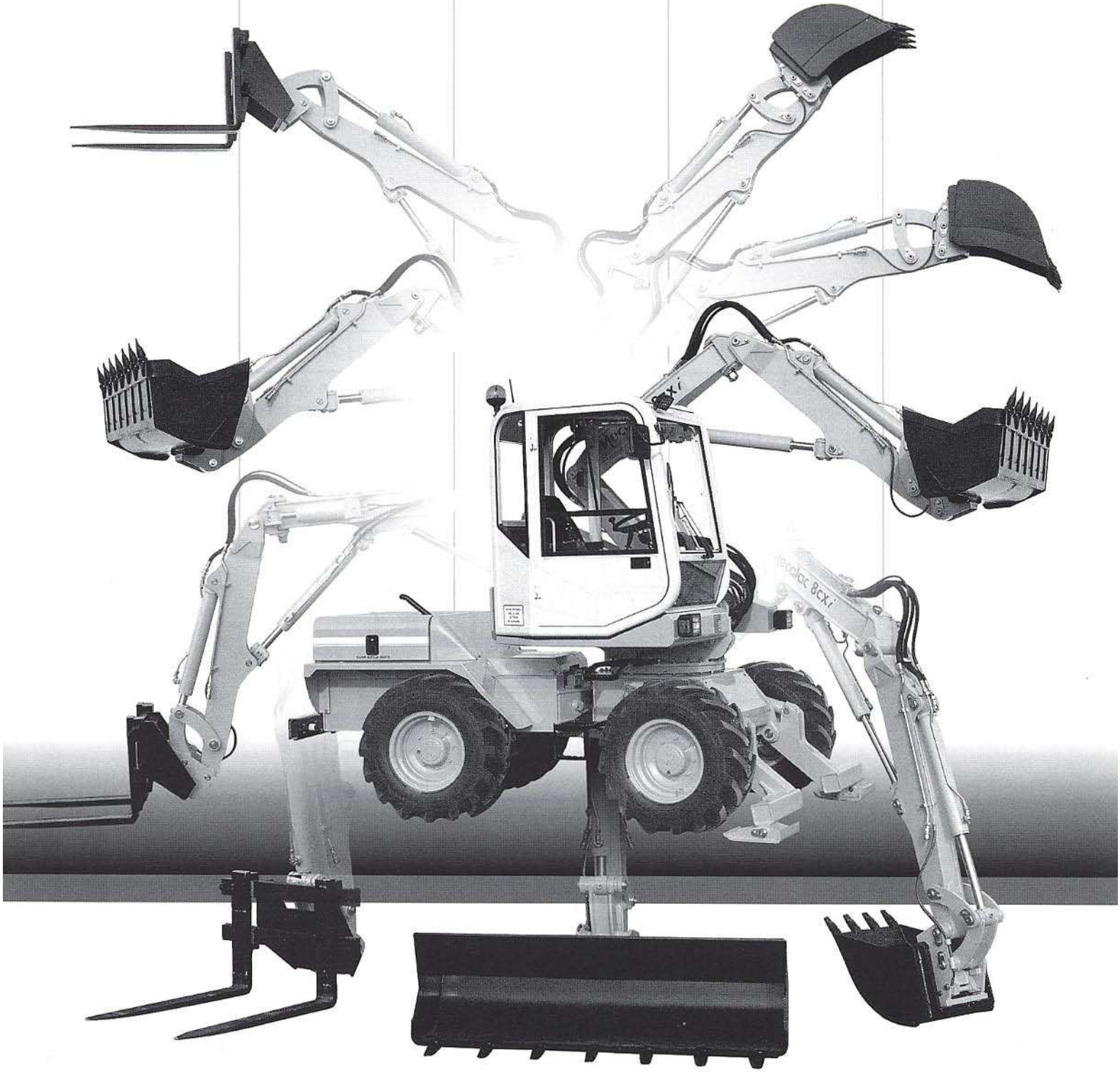

Mecalac

Courtesy of Machine.Market

OVERALL DIMENSIONS

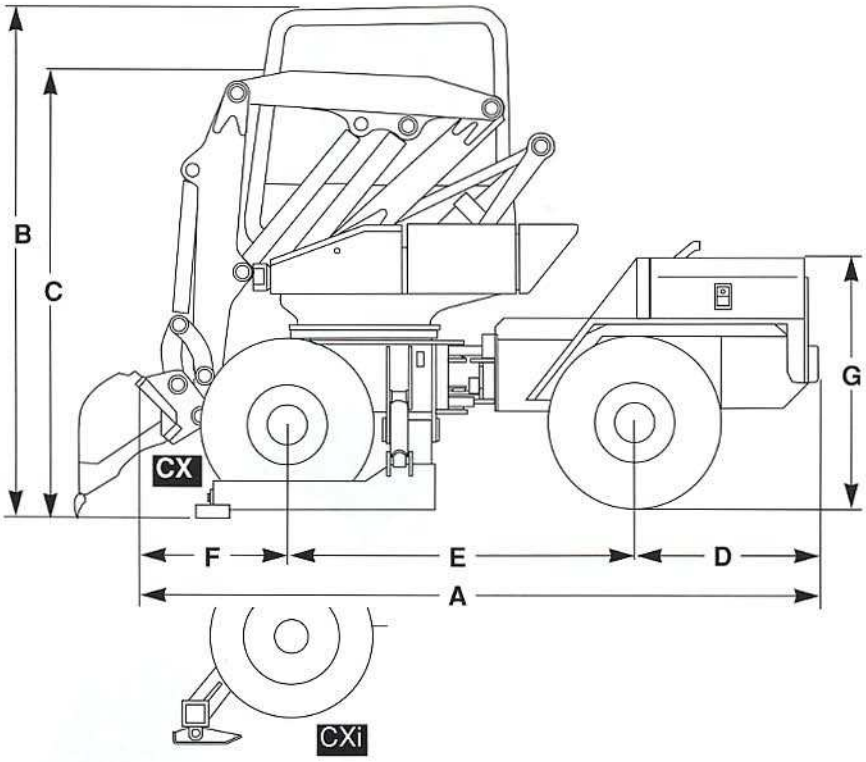

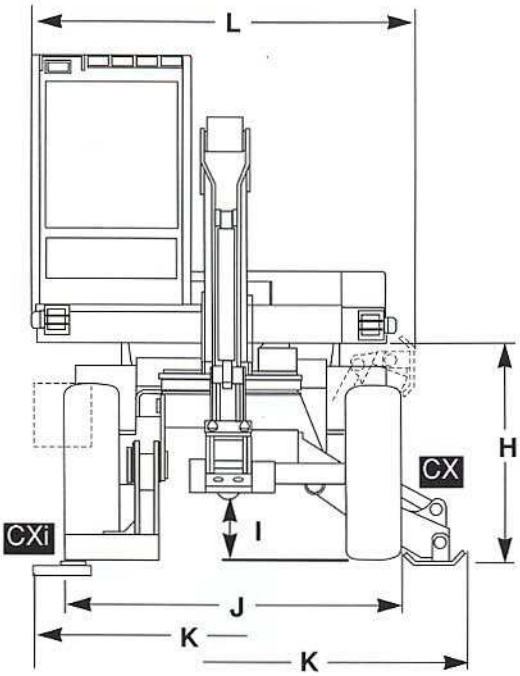

mm / *Inches*

8CX - CXi	A	B	C	D	E	F	G	H	I	J(CXi)	J(CX)	k(CXi)	K(CX)	L(CXi)	L(CX)
(*)	4060	2850	2670	1110	2050	900	1381	1180	295	1950	1950	2340	2780	2215	2260
Tyres	*13'03"*	*9'03"*	*8'08"*	*3'07"*	*6'08"*	*2'11"*	*4'06"*	*3'10"*	*0'11"*	*6'04"*	*6'04"*	7'07"	*9'01"*	*7'02"*	*7'04"*
(**)	4060	2914	2734	1110	2050	900	1445	1206	359	2070	1950	2340	2780		
	13'03"	9'06"	*8'11"*	*3'07"*	*6'08"*	*2'11"*	*4'08"*	*3'11"*	*1'02"*	*6'09"*	*6'04"*	7'07"	*9'01"*	—	

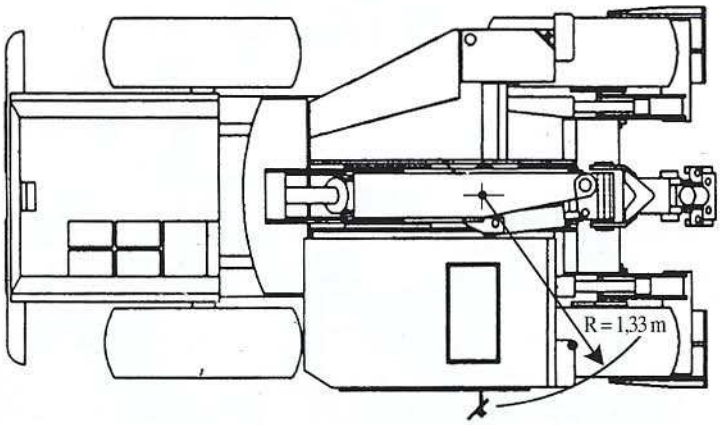

WEIGHT

- Empty, in working order, without bucket 6260kg *13800lb*
- Empty, in working order, with loading bucket 6500kg *114330lb*

ENGINE

- ISUZU 4JB1 2771 cm³ *156cu.in*
  - Diesel, 4-cylinders, direct injection
  - Water-cooled
  - Diesel consumption : 7.15 l/h
  - Oil capacity : 7.5 l
  - Power (DIN 6271 ISO 3046/1) at 57 PS(42 KW), at 2600 rpm
  - Max. torque : 176 Nm at 1900 rpm

CHASSIS

- Articulated and oscillating by ball joints
  - horizontal displacement ±8°
  - articulation angle ±30°
  - turning radius inside 2.80 m -*11"* outside 4.90 m-*1'7"*
- Axles fixed rigidly on both chassis
- Front chassis equipped with 2 independent side stabilisers for the CX model
- Front chassis equipped with 2 independent front stabilisers for the CXi model
- Oscillation locking, standard on CXi model (optional on CX model), can be operated whatever the position of the machine on the ground; permits a very large increase in stability, particularly during side work. In order to be unlocked, requires, as a safety measure, 2 control operations from the driver's seat.

Tanks

- Hydraulic oil, built into the left-hand side member, capacity : 80 l.
- Diesel, built into the right-hand side member, capacity : 105 l.

Filtration

- Hydraulic : on intake for translation ; on return for equipment ; on the "Load Sensing" system
- Diesel : filter on engine and sediment chamber

Courtesy of Machine.Market

filter
- air : dry air

REVOLVING SUPERSTRUCTURE

- full 360° slewing
- Inner toothed crown wheel drive
  Swivelling by slow radial piston hydraulic motor
- Slewing speed : 8 rpm
- Hydraulic motor : 560 cm³ *34cu.in*
- Max. pressure : 250 bar
- Dynamic braking

TRANSMISSION

- Hydraulic ; "automotive" type automatic control, i.e. controlled by the accelerator depending on forward resistance,
- Electric reversing mechanism on steering column without need to stop
- 2 speed ranges in both directions of travel : "site" and "road"
- "Inching" or slow approach control making it possible, at constant engine speed, to reduce the speed until the machine stops; this function is controlled by a pedal which also performs the hydrostatic braking function
- Hydraulic translation motor and pump are variable-displacement enabling the gear ratio to be varied continuously over the entire speed range
  from 0 to 25 km/h
- Max. tractive effort 3900 daN *8500lb*
- Max. pressure 460 bar
- Max. Flow rate 145 l/min
- Pump 56 cm³ *3.4cu.in*

● Axles and wheels

- 4 driving wheels of the same size
  (*)fitted as standard with 12.0/18 PR12T86 tyres
  (**)fitted optionally with 400 / 70-20T37 tyres
- 2 rigid driving axles fixed on the chassis
  - on back axle transfer box with a single ratio giving movement directly to the back axle and to the front axle by a telescopic cardan shaft
- Simultaneous differential lock on both axles
- Negotiable incline on road : 35°
  all terrain : 35°

● Brakes

- Main brakes multiple disc with oil bath incorporated in both axles
- Parking brakes multiple disc with oil bath incorporated in both axles
- Emergency brakes multiple disc with oil bath incorporated in both axles operating by lack of pressure
- Hydrostatic brake operated by the "Inching" function pedal

STEERING

- "Load Sensing" hydrostatic steering by 2 double-acting cylinders controlled by a directional control block with priority valve
- Max. pressure 175 bar
- Max. flow rate 32 l/min

EQUIPMENT

- Made up of 3 parts : boom, intermediate boom and arm
- Boom controlled by a patented cylinder and connecting rod system permitting 180° movement
- Offset
  - mechanical right 22° and left 22° standard
  - hydraulic optional right 30° and left 30°
- Quick-release tool connection system
  - take-off with automatic mechanical locking
  - hydraulic unlocking

● Power of the equipment

- Tear-out force (as backhoe) 4200 daN
- Tearout force (as loader) 3800 daN
- For lifting and handling, the "Mecalac" must be provided with safety valves (see recommendation)

HYDRAULIC CIRCUIT

● Equipment circuit

- Variable displacement piston pump 28 cm³ *1.7cu.in*
  - max. pressure 280 bar
  - max. flow rate 73 l/min
- "Load Sensing" directional control block
  - integral simultaneity of equipment slewing and movements
  - progressivity of movements independent of load and flow rate
  - Load- and flow rate-dependent pressure control
  - pressure control depending on the highest load
  - Flow rate automatically controlled according to use resulting in limitation of viscous restriction and a constant engine speed, fuel economy, reduction in sound level

- Ancillary functions controlled by solenoid valves
  - independently-controlled right and left stabilisers
  - differential lock
  - tool unlocking
  - arm-rest raising safety device
  - running board (8CXi)
  - brakes : parking, emergency, main, hydrostatic
  - accelerator

● Slewing, steering circuit

- Independent of the other circuits ; by fixed displacement pump
  - pressure 250 bar
  - flow rate 32 l
  - displacement 12 cm³

ELECTRICAL SYSTEM

- Battery 12 V 525 A - 115 A
- Alternator 12 V 35 Ah
- Starter 12 V 2,2 Kw

CAB

- ROPS and FOPS approved
- Safety glass providing greater visibility in all directions
  - Sliding right-hand side window and windscreen
- Power-assisted controls
- Seat : position, back and hardness fully adjustable
- Heating and demisting by independent system with thermostatic temperature controls
- Ventilation in summer
- Electric fuel gauge and all the safety indicators grouped together on the ergonomic dashboard
- Hour counter visible without getting into the cab
- Main fuses easy to see and reach

● Sound proofing

- Puissance acoustique : 102 dB (A) (outside)

BACKHOE EQUIPMENT (*)

* With DUNLOP 12.0 x 18 T 86 tyres

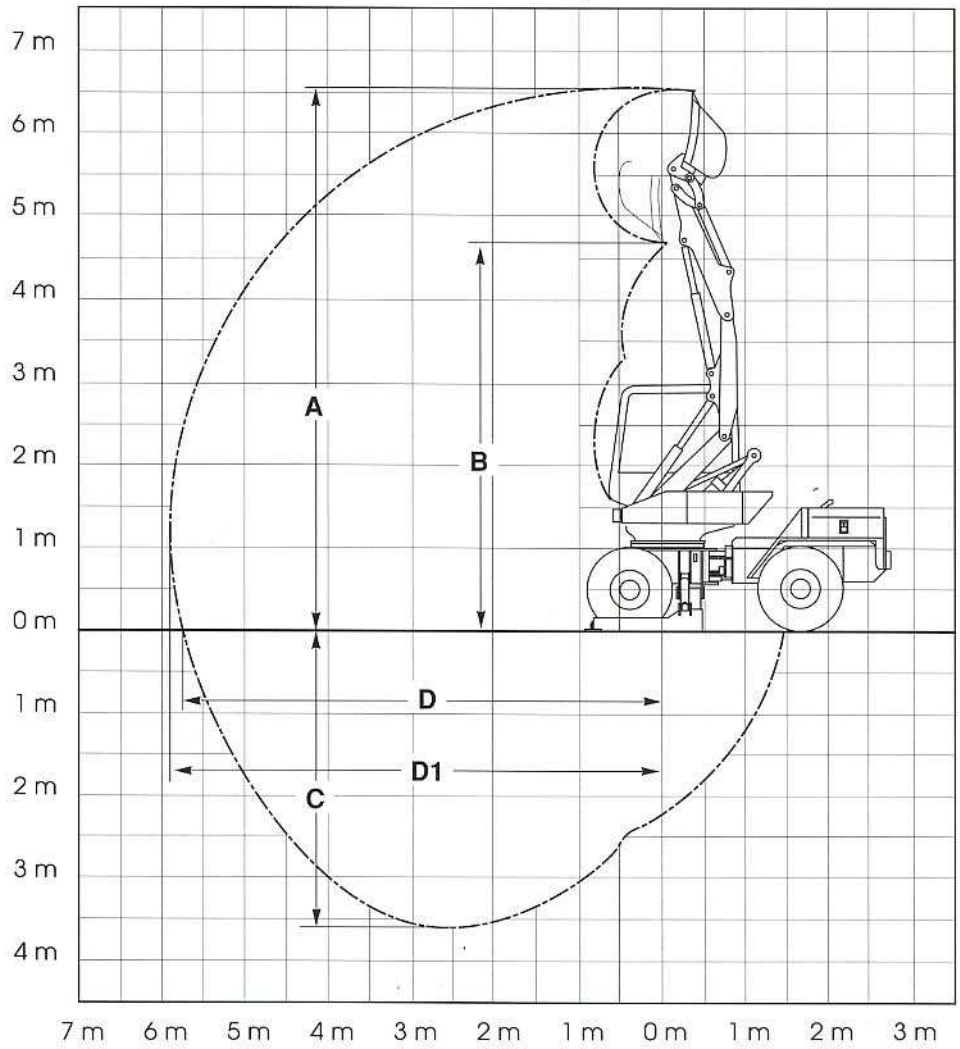

mm /*inches*	A	B	C	D	D1
8 CX / 8CXi	6690 -*21'10"*	4820-*15'09"*	3650-*11'11"*	5760-*18'10"*	5960-*19'05"*

Courtesy of Machine.Market

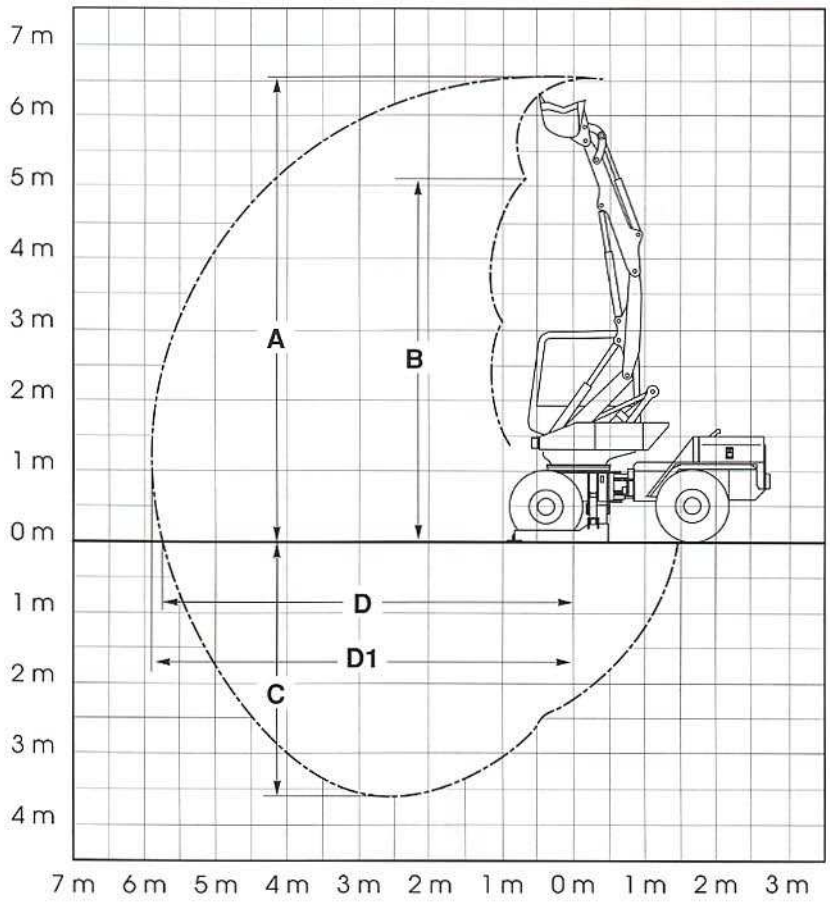

LOADER EQUIPMENT (*)

* With DUNLOP 12.0 x 18 T 86 tyres

mm-*inches*	A	B	C	D	D1
8 CX / 8CXi	6680 *21'10"*	5200 *17'*	3640 *11'10"*	5750 *18'09"*	5950 *19'05"*

HANDLING EQUIPMENT (*)

* With DUNLOP 12.0 x 18 T 86 tyres

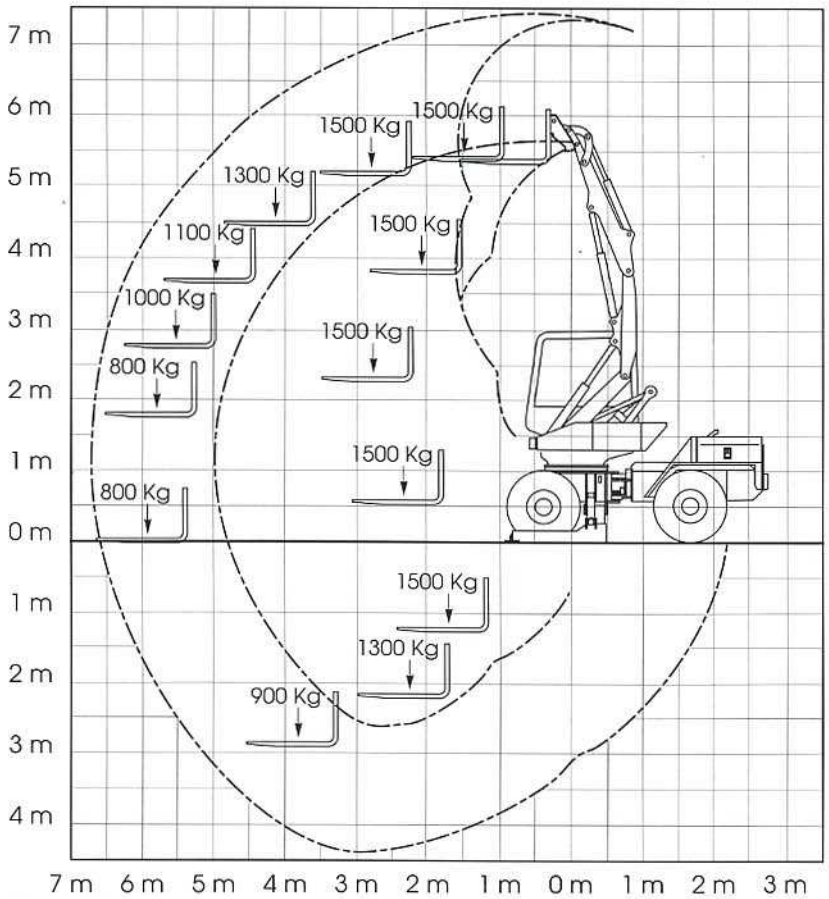

Mecalac

PAE LES GLAISINS BP 230
74942 ANNECY-LE VIEUX
CEDEX FRANCE
Tél. 50 64 01 63
Télex 385 254 F
Téléfax 50 64 02 79

Machines designed and manufactured in France

With a view to permanently improving their machines, **Mécalac** reserve the right to modify the specifications without prior notice

Groupe Pel-Job

Imprimé en France - Printed in France - ColorPress Annecy

Courtesy of Machine.Market