TAKEUCHI

Those in the know, know Takeuchi

TS80R2 SKID STEER LOADER

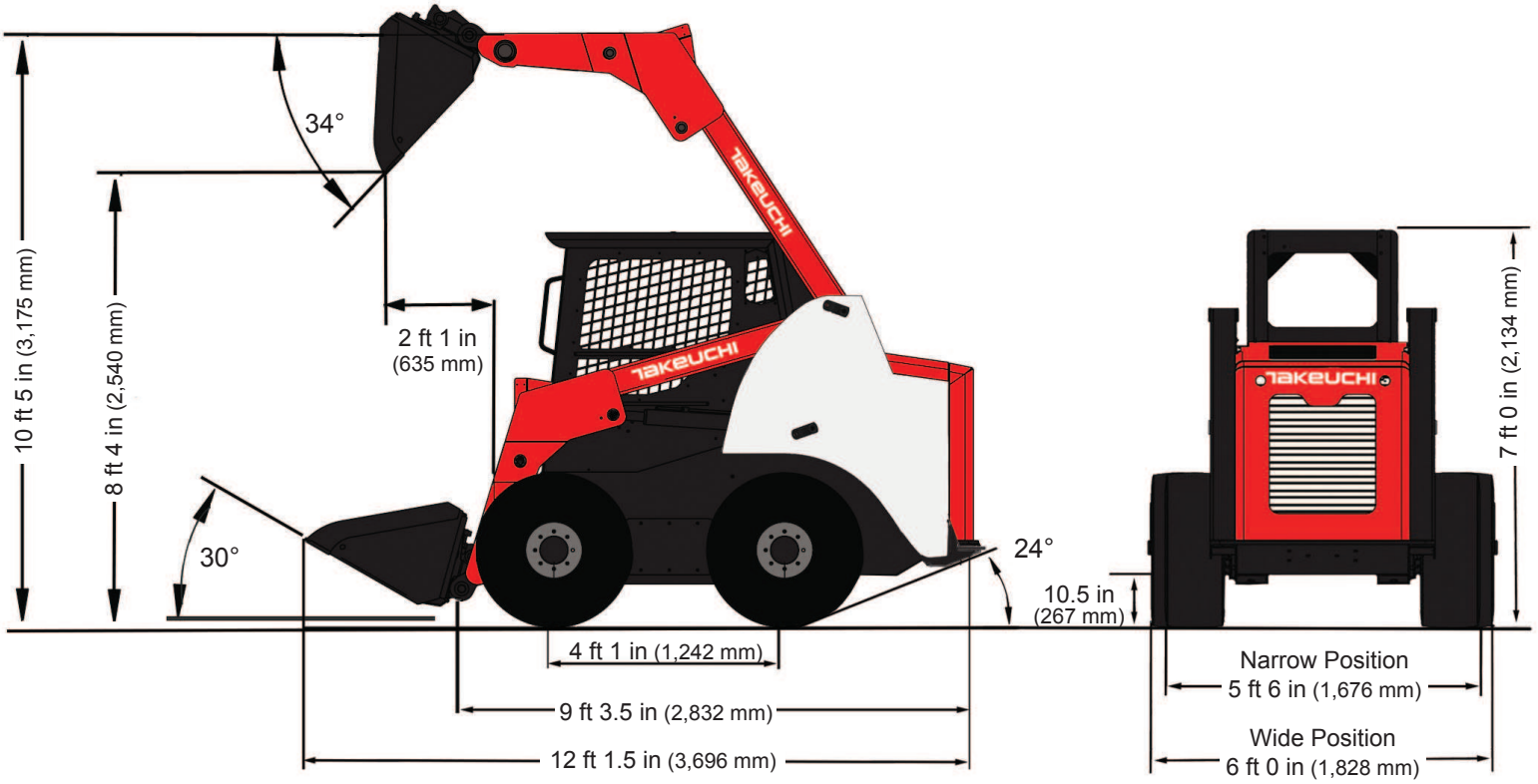

Dimensions and specifications provided are with standard dirt bucket unless otherwise noted.

OPERATING PERFORMANCE

Operating Weight w/ Bucket, Canopy	7,950 lbs	(3,606 kg)
Tipping Load, Foundry Bucket	5,650 lbs	(2,562 kg)
Operating Capacity*, Foundry Bucket	2,825 lbs	(1,281 kg)
Tipping Load, Dirt Bucket	4,720 lbs	(2,140 kg)
Operating Capacity, Dirt Bucket	2,360 lbs	(1,070 kg)
Bucket Breakout Force	5,845 lbs	(2,651 kg)
Lift Arm Breakout Force	7,080 lbs	(3,211 kg)
Traction Force	8,700 lbs	(3,946 kg)
Travel Speed - One Speed	8.2 mph	(13.1 km/hr)
Travel Speed - Two Speed (optional)	11 mph	(17.7 km/hr)

*Rated Operating Capacity (ROC) for skid steer loaders is rated according to SAE J818 at no more than 50% of the tipping load.

HYDRAULIC SYSTEM

Auxiliary Hydraulics - Standard Flow	21.5 gpm	(81.0 Lpm)
Auxiliary Hydraulics - High Flow (optional)	31.0 gpm	(117.3 Lpm)
System Operating Pressure	3,335 psi	(22.69 MPa)

ENGINE

Make / Model	Deutz / TD2.9L4 Turbo	
Emission Standard	U.S. EPA FINAL TIER 4	
Engine Displacement	177 cu in	(2.9 L)
Horsepower @ 2,600 rpm	74 hp	(55 kW)
Maximum Torque @ 1,800 rpm	192 ft-lb	(260 Nm)

FLUID CAPACITIES

Engine Lubrication	9.0 qt	(8.5 L)
Cooling System	20.0 qt	(19.0 L)
Fuel Tank Capacity	28.0 gal	(106.0 L)
Fuel Consumption (65% of Full Load)	2.99 gal/hr	(11.37 L/hr)
Hydraulic Reservoir Capacity	10.0 gal	(37.8 L)
Chain Case Capacity (Each)	4.2 qt	(4.0 L)

Courtesy of Machine.Market

Product Features

TS80R2 SKID STEER LOADER

ENGINE
- Four Cylinder Turbocharged Deutz Diesel Engine
- U.S. EPA FINAL TIER 4 Emission Compliant
- Turbocharged
- Maintenance Free Diesel Oxidation Catalyst (DOC) Exhaust After-treatment
- Dial Throttle Control
- Engine Driven Fan
- Dual Element Air Cleaner with Restriction Indicator
- High Capacity Radiator and Hydraulic Oil Coolers Mounted Side-by-Side on Swing Out Frame
- Block Heater, 120 volt (optional)

ELECTRICAL
- 12 volt System with 95 amp Alternator
- Heavy Duty Battery, 800 CCA
- Work Lights, Front (2) and Rear (2)
- Back-up Alarm
- Horn

DRIVE TRAIN
- Mechanical Faced Axle Seals
- 100 ANSI Bow Tie Drive Chain
- Spring Applied Hydraulically Released Wet Disk Park Brake
- Two-Speed Travel (optional)
- 12x16.5 HD 10 ply Tires on Reversible Offset Wheels
- 12x16.5 HD Foam Filled Tires (optional)
- 33x15.5-16.5 Flotation Tires (optional)
- 31x10 Solid Tires (optional)
- Over the Tire Tracks (OTT) (optional)
- Contact Dealer for Other Tire Options

HYDRAULIC AND WORKING EQUIPMENT
- Radial Lift Loader Linkage
- Proportional Auxiliary Controls
- Dual Direction Continuous Flow Mode
- Pressure Relieving 1/2” Flat Face Couplers
- 14-pin Attachment Connector
- Mechanical Quick Coupler
- Hydraulic Quick Coupler (optional)
- High Flow Auxiliary Hydraulics (optional)
- Hydraulic Self Leveling on/off (up) (optional)
- Ride Control Accumulator (optional)
- Rear Door Guard Screen (optional)

OPERATOR’S STATION
- Hydraulic Pilot Joystick Controls
- Tilt-up ROPS / FOPS Structure
- Rear Pivoting Lap Bar with Integrated Arm Rests
- Multi-informational Display with Digital Gauges and Menu Navigation
- Electronic Monitoring System that Includes Visual and Audible Alarms
- Overhead Skylight with Guard
- Rear View Mirror
- 12 volt Accessory Port
- Suspension Seat with 2” Seat Belt
- 3” Seat Belt (optional)
- Deluxe Air Suspension Seat (optional)
- Enclosed Cab with Swing Out door (optional)
- Heat and Defrost (optional)
- A/C, Heat, and Defrost (optional)
- AM / FM / MP3 / Weather Band Radio (optional)
- Special Application 1/2” Polycarbonate Swing Out Door (optional)

ATTACHMENTS
- 72” Smooth Bucket with Bolt-on Cutting Edge (17.8 cu ft) (optional)
- 72” Tooth Bucket with Bolt-on Cutting Edge (17.8 cu ft) (optional)
- 72” Multi-Purpose (4-in-1) Bucket (optional)
- 72” Scrap Grapple Bucket (optional)
- 72” Brush Grapple Bucket (optional)
- 72” Smooth Foundry Bucket (optional)
- 66” Smooth Bucket for use with Wheels Mounted in Narrow Position (optional)
- 66” Tooth Bucket for use with Wheels Mounted in Narrow Position (optional)
- 48” Pallet Forks (optional)
- See Attachment Brochure for Additional Options

© 2015 Takeuchi Manufacturing (U.S.), Ltd. All Rights Reserved. Printed in the U.S.A.
In accordance with our established policy of continued improvement, specifications and features are subject to change without notice. Pictures may show options other than standard equipment.
FORM: TS80R2 Spec Sheet Jul. 2015

TAKEUCHI
Those in the know, know Takeuchi

Courtesy of Machine.Market