IMPORTANT!

READ THIS MANUAL BEFORE OPERATING MACHINE.

COMPACT TRACTOR LOADER BACKHOE

PARTS MANUAL

TERRAMITE CORPORATIONS SINCE 1965

T5C

MADE IN THE USA

terramite CONSTRUCTION EQUIPMENT

"Backed by a World of Experience"

600 Golf Mountain Road • P.O. Box 7146, Charleston, WV 25356-7146 USA
1.800.428.3772 Fax 1.800.776.4845 • International 1.304.776.4231 Fax 1.304.776.4845

www.terramite.com

Revised 04/2006

Courtesy of Machine.Market

Courtesy of Machine.Market

Safety Tips

Safety is a prime consideration in the design of this machine. Guards, shields and other safety features are built in wherever possible. However, accident reports show carelessness causes the majority of accidents. You can avoid most accidents by observing the safety rules on these pages. Study these rules carefully and enforce them on the job:

Never allow minors to operate or be in the vicinity of the machine while working.

Do not allow the T5C to be operated by anyone who is intoxicated or on medication that would affect their judgement or ability to operate the machine.

The machine is designed to be operated by adults who are of average size and weight. Persons who are extremely heavy, big or tall, or those who are exceedingly short, light or weak can not run the machine.

Before Operating the Terramite T5C

Read the Operator's Handbook. Never allow anyone to operate the backhoe without reading the Operator's Manual and Safety Instructions. This should be followed by supervised training.

Check Your Equipment. Always make a complete inspection of the machine before operating it that day. Check the hydraulic system and the engine oil level. Then check the machine for broken, missing or defective parts. Check the tires for cuts, bulges, irregularities and abnormal wear and proper inflation. Check the neutral position of the foot pedal. A malfunctioning machine invites accidents.

"Do Not Operate" Tag. When you service the machine, put a **"DO NOT OPERATE"** Tag on the instrument panel. This tag (Terramite Part Number 1-400.82) is included with each machine.

Keep Your Machine Clean. Slippery surfaces are hazardous. Remove oil, grease or mud from the operating area of the tractor. Failure to keep these areas clean could cause a serious accident.

Wear What is Needed for Protection. Protect yourself by wearing all the protective clothing and personal safety devices issued to you or required by job conditions. You may need a hard hat, safety shoes, safety glasses, heavy gloves, hearing protection, reflective clothing, wet weather gear and a respirator. Never take chances by wearing loose clothing, watches or rings.

Look For Hazards. Walk around a new work area and check for any hidden hazards, such as holes and abutments.

Read and Heed Safety Decals. Make sure the safety and information decals can be easily read. To clean decals, use soap and water only. Gasoline or solvents will destroy the decals. If these decals are missing or illegible, call our Parts/Service Department for replacements.

Roll-Over Protective Structure. All Terramite T5C tractor loader backhoes are equipped with a Roll-Over Protective Structure. This is designed to protect the operator in the event of a roll-over. If this machine has been rolled over, the R.O.P.S. must be replaced. It is designed to be used only once.

Driving Pivot Pins. When driving pivot pins in or out, use care to guard against injury from particles that may chip off the pin or object used in striking the pin. These pins can fly out at high speed if they are not tapped lightly just before they come out. Make sure there isn't anyone or anything in the way, in case the pin flies out. Safety glasses should be worn.

Courtesy of Machine.Market

Before Your Start

⚠ READ OPERATOR'S HANDBOOK ⚠

Carefully read all WARNING! and DANGER! messages in handbook and be sure you understand their meanings.

IMPORTANT! If this machine is used by the owner, an employee, or is loaned or rented, make sure that the following instructions are complied with:

1. **The operator has read the Operation and the Safety Rules sections of the Operator's Handbook.**

2. **He has been instructed on the safe and correct use of the machine.**

3. **He has practiced operating the machine and the use of all controls in a safe, clear area before he operates the machine on a job site.**

4. **He has read all safety decals on the machine.**

5. **He has been informed to clear the area of other persons and hidden hazards before starting the machine.**

Courtesy of Machine.Market

Table of Contents

Safety - Important 1.1
Before Operating the Terramite T5C 1.2

Section Two: HYDRAULICS

Oil Change and Type Specifications 2.1
Front with Loader Arm Assembly Raised 2.2
Loader Valve Hoses and Fittings
Under Fuel Tank Hood Assembly 2.3
Transmission Assembly 2.4
Rear Valve 2.5-2.7
Gear Pump Part #66045 ..... 2.8
Rod Assembly 2.9
Hydrastatic Transmission 2.10
Hydraulic Main Power Circuits (Gas Model) 2.11
Hydraulic Main Power Circuit 2.12
Loader Circuit 2.13
Woddlestick Hose Diagram Backhoe Circuit 2.14
MAB/MAE Torquemotor Exploded 2.15
Power Steering Column Exploded 2.16
Schematic - Backhoe Control Valve 2.17
Parts Ordering Information 2.18
V20 Seal Identification Chart
Loader Valve 2.19
4-Way, 3-Position Valve Section 2.20
Loader Check Plug / High Pressure Releif 2.21

Section Three: COMPONENTS

Seat Assembly 3.1
Exploded View of Front End Loader 3.2
Exploded View of Dash 3.4
Under the Hood - Kohler Command Engine 3.6
Drive Shaft Coupler 3.7
View from Behind Center Steer 3.8
View from Behind Dash 3.10
Front Wheel Hubs / Hub Assembly and Spindle 3.12
Front / Rear Tires and Rims 3.13
Parking Brake Assembly 3.14
Retro Fit Parking Brake Spring Assembly 3.16
Front of Rear Axle - Parking Brake Assembly 3.16
Exploded View of Dipstick 3.17
Backhoe Assembly 3.18
Rear Axle Assembly 3.20
Pin Schematic 3.22
General Tightening Torque for Bolts, Nuts
and Taperlock Studs 3.23
Decal Location Right Side 3.24
Decal Location - Dash 3.25
Decal Location - Rear 3.26
Couplings 3.27

Section Four: ELECTRICAL WIRING

Diagram Kohler Magnum 20 HP 4.1
Diagram Kohler Command 20/25 HP 4.2
Harness/A-Kohler Command 4.3
Diagram Honda 20 HP 4.4
(Pre - 1997 Model) 4.5
Harness/A-Relay Harness 4.6
Harness/Honda Engine 4.7
Harness/Honda Voltage Regulator Harness/
A-Relay Harness 4.8
Harness - Honda Dash 4.9

Section Five: OPTIONS

Tires 5.1
Work Lights and Canopy/Mounted Lights
Strobe Light 5.2
Clam Shell 4 in 1 Bucket 5.3
Under Dash for Clam Shell 4 in 1 Bucket 5.4
Drive Position
Dash for Clam Shell Buck 5.5
Street Pads/Flip Over Pads/Tooth Caps 5.6
Quick Attach Backhoe Buckets (After 5-1-98) ... 5.7
Auger (Bradco./McMillen) 5.8
Auger Connections 5.9
Back-up Alarm and Connections 5.10

Section Six: TRANSLATIONS

Translations ..... 6.1 to 6.6

Section SEVEN: INDEX & SAMPLE WARRANTY

Index ..... 7.1 to 7.5
Sample Warranty 7.6

RECORDS

Serial Number _____
Model# _____
Engine Type: _____
Engine Serial Number: _____
Accessories: _____
_____
_____
_____

Courtesy of Machine.Market

Courtesy of Machine.Market

Oil Change and Type Specifications

When your machine is new, the hydraulic system oil and filter must be changed within the first 50 hours of use and every 250 thereafter. Refill the hydraulic reservoir with engine oil type API SF.CD 15W40 when outside temperature is above 40 degrees F. Use engine oil type API SF.CD 10 weight when outside temperature is below 40 degrees F. Replace filter with Terramite / 21002 filter. It is important to follow these instructions to alleviate any cold weather engine starting problems and any pressure or heat related component failures.

DO NOT USE REGULAR HYDRAULIC OIL! MAJOR DAMAGE WILL RESULT!

This is the position machine must be in to check proper level in hydraulic tank.

Required Pre-Fuel Filter Changes for Gasoline and Diesel Machines

ALL Terramite Backhoes and Street Sweepers require their pre-fuel filters to be changed at the first 20 hours and again at 40 hours. These pre-fuel filters should be changed every 20 to 50 hours thereafter using a 10 micron filter.

The following Pre-fuel filters are designed for gasoline and diesel engines.

Terramite 15506

NOTE: Filling tank with loader or backhoe in any other position will result in overfilling and spillage of fluid through the breather cap. Replace cap if oil should ever spill out of breather cap since it will clog off the air supply that the systems needs to operate properly.

Copyright © 2006 Terramite Corporation

Courtesy of Machine.Market

View from Front with Loader Arm Assembly Raised

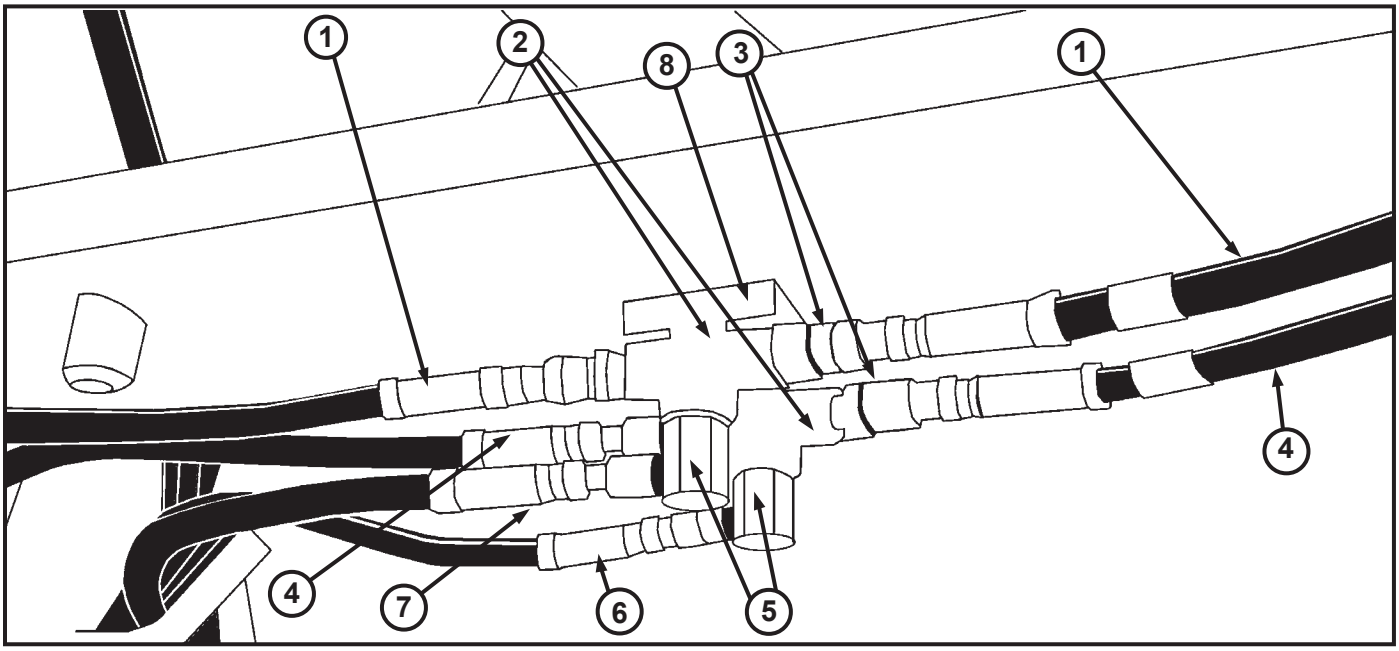

ITEM	PART NUMBER	DESCRIPTION	QTY.
1	88418	Hose, 1/4" x 18" (front hose set)	2
2	22244	Fitting, 1/4" Tee (front hose set)	2
3	20174	Fitting, 1/4" (front hose set)	26
4	88434	Hose, 1/4" x 34" (front hose set)	2
5	22174	Fitting, 1/4" x 90° (front hose set)	5
6	88462	Hose, 1/4" x 62" (front hose set)	1
7	88463	Hose, 1/4" x 63" (front hose set)	1
8	12033	Distributor Block	1

Copyright © 2006 Terramite Corporation

Courtesy of Machine.Market

View of Loader Valve Hoses and Fittings from Right Side of Engine Compartment Under Fuel Tank Hood Assembly

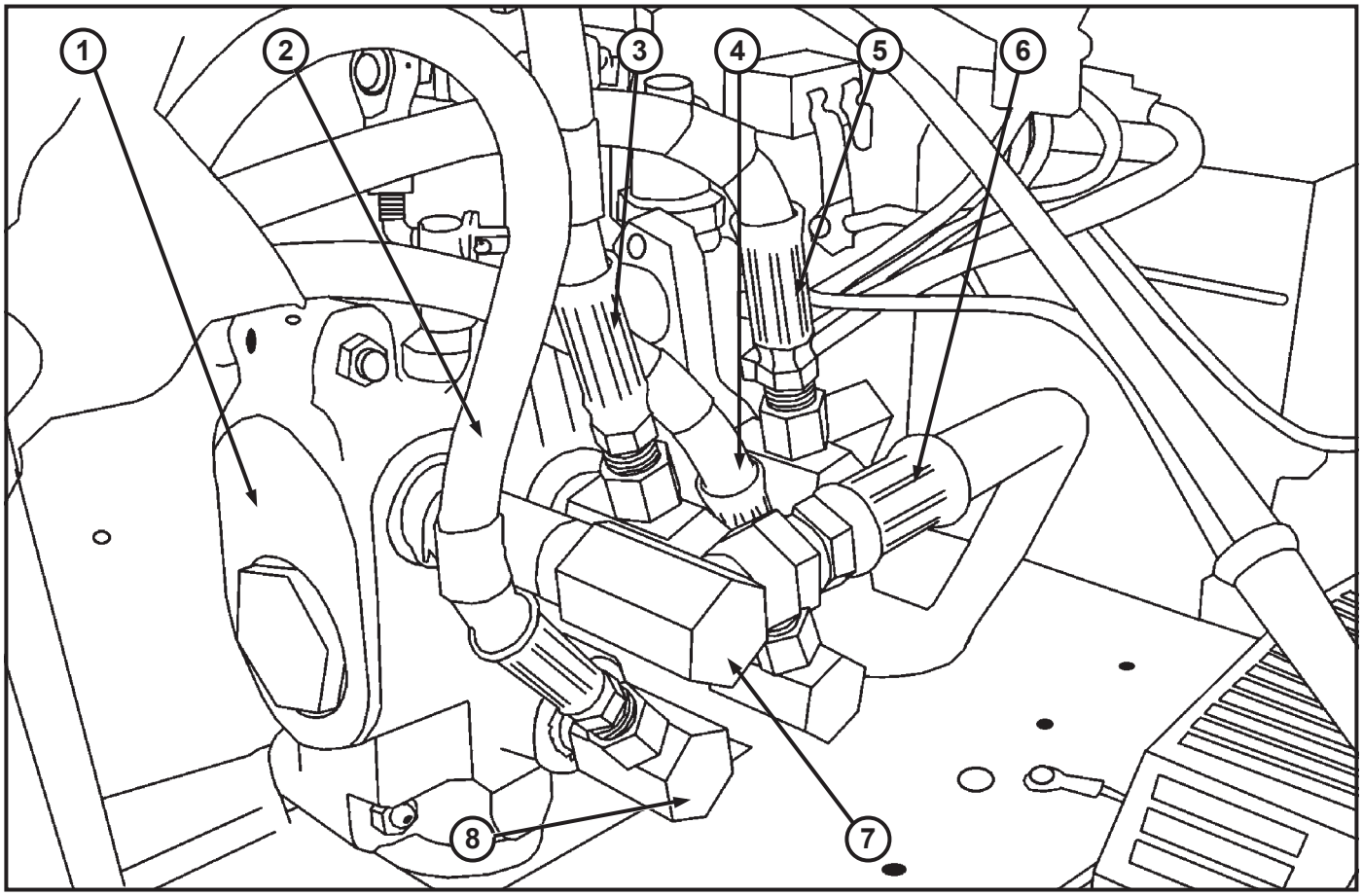

ITEM	PART NUMBER	DESCRIPTION	QTY.
1	85015	Valve, Loader(No Fittings)	1
1	84070	Valve, Loader(With Fittings)	1
2	88483	Hose, 1/4" x 83", Loader Valve	1
3	88466	Hose, 1/4" x 66", Loader Valve	1
4	88463	Hose, 1/4" x 63", Loader Valve	1
5	88462	Hose, 1/4" x 62", Loader Valve	1
6	88835	Hose, 1/2" x 35", Loader Valve	1
7	22278	Fitting, 1/2" x 90°, Loader Valve	1
8	22784	Fitting, 1/2" x 1/4" x 90°, Loader Valve	4
	13096	Front Valve Seal Kit	1

Copyright © 2006 Terramite Corporation

Courtesy of Machine.Market

View from Top - Transmission Assembly

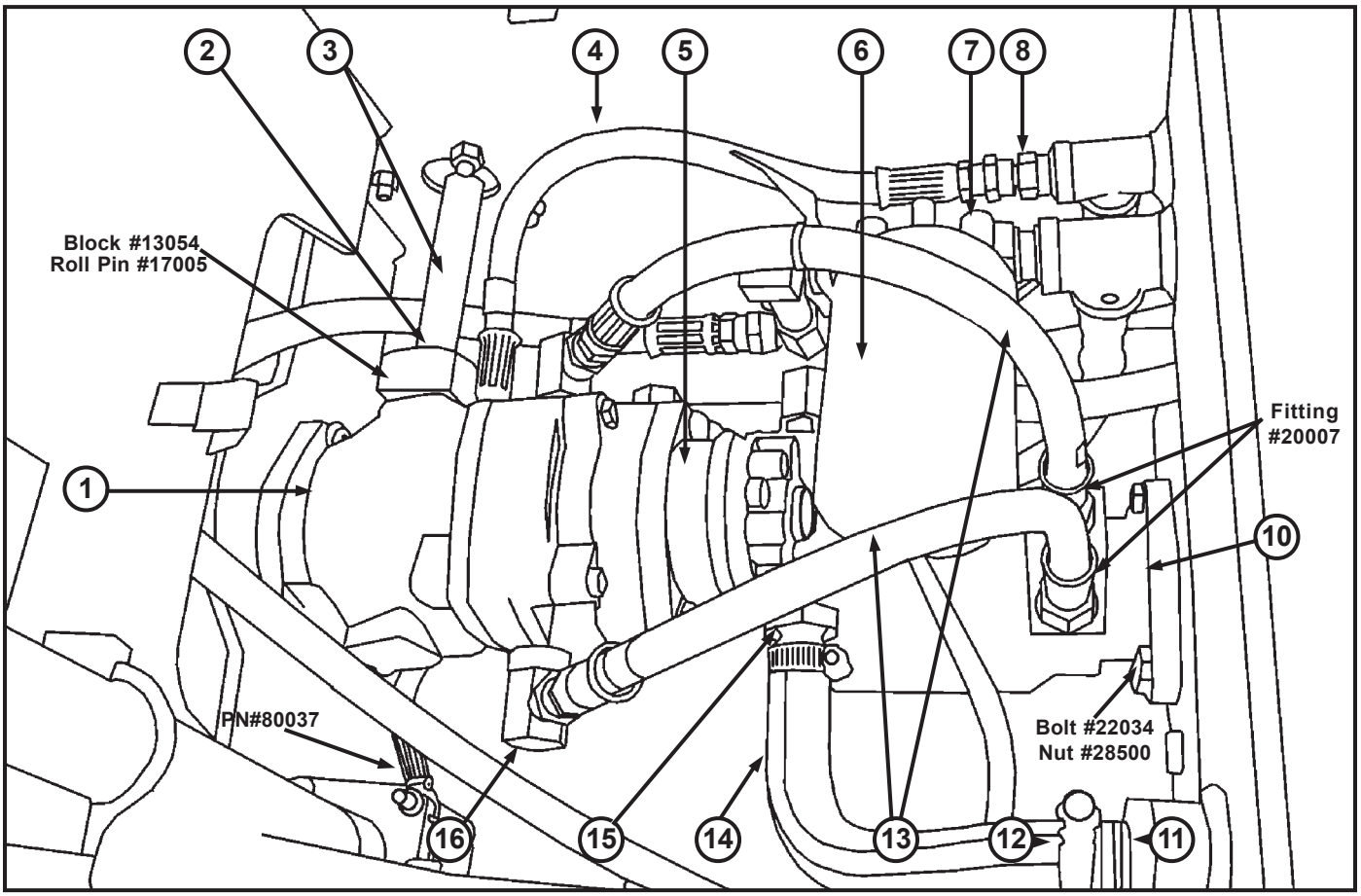

ITEM	PART NUMBER	DESCRIPTION	QTY.
1	64064	Hydrostatic Transmission Gas Only (Resale)	1
	64012	Hydrostatic Transmission Diesel Only	
2	11620	Pedal Shaft	1
3	61623	Pedal Shaft Bushing	1
4	88615	Hose, 3/8" x 15", Transmission	1
5	66045	Gear Pump	1
6	21002	Filter, Hydraulic	1
7	22003	Filter Base	1
8	21786	Fitting, 1/2" x 3/8", Trans.	1
9	15900	Tank, Hydraulic, T5	1
10	64003	Torquemotor	1
11	22201	Filter, Strainer (Inside Tank)	1
12	22020	Clamp, Hose	2
13	88820	Hose, 1/2" x 20", Trans.	2
14	81012	Hose, 3/4" x 12", Trans. prior to 11-92	1
	81010	Hose, 3/4" x 12", Trans. after 11-92	
15	81612	Fitting, 1 1/16" x 3/4", Trans.	1
16	27128	Fitting, #12 x 1/2" x 90°, Trans.	2
	25286	Fitting On Bottom of Transmission	
	22118	Fitting For Charge Plate Adapter 3/8 90%	

Copyright © 2006 Terramite Corporation

Courtesy of Machine.Market

View from Operator Position of Rear Valve

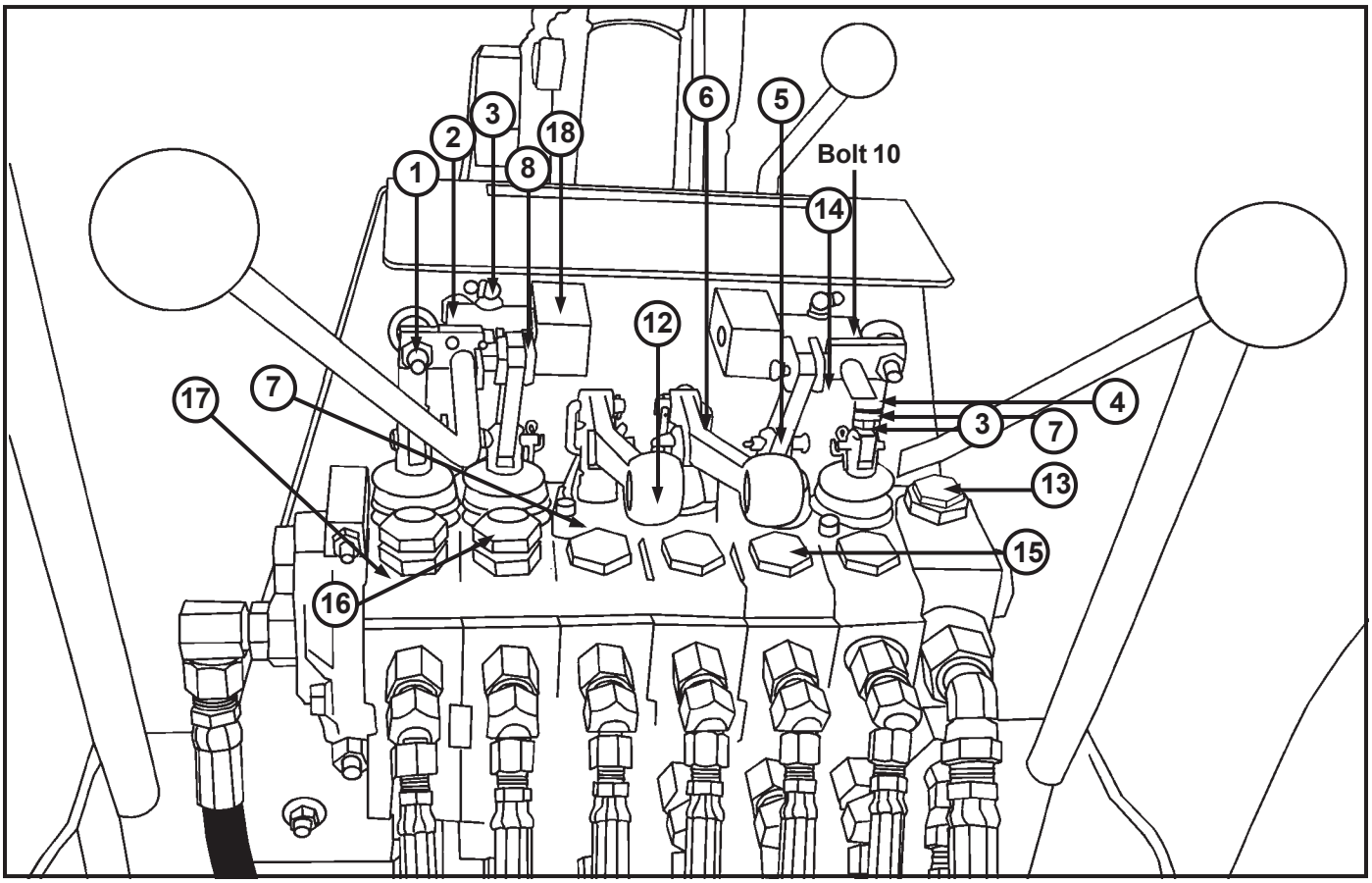

ITEM	PART NUMBER	DESCRIPTION	QTY.
1	25500	Nut, 5/16" NF Jam	2
2	13444	Wobblestick Pivot Block, Universal	1
3	16410	Eye Bolt	2
4	13965	Linkage	3
5	13443	Connecting Link	2
6	13411	Valve Link	3
7	13410	Aluminum Valve Handle Bracket	2
8	13418	Pin, Valve Hose Link Pivot	8
9	21429	90° Grease Fitting	1
10	23008	Nut on back of Wobblestick	1
11	13443	Lock Nut	1
12	13431	Outrigger Handles	2
13	13429	Main Relief Rear Valve	1
14	13423	Valve Boot Spool Protector	4
15	13401	Load Check Plug Assembly	9
16	13456	Port Relief 2600#	1
17	13454	Port Relief 2000#	2
18	13444	Uni Blocks	
	85041	Orings	6
	13499	Pressure Shims	

Copyright © 2006 Terramite Corporation

Courtesy of Machine.Market

View from Operator Position of Rear Valve

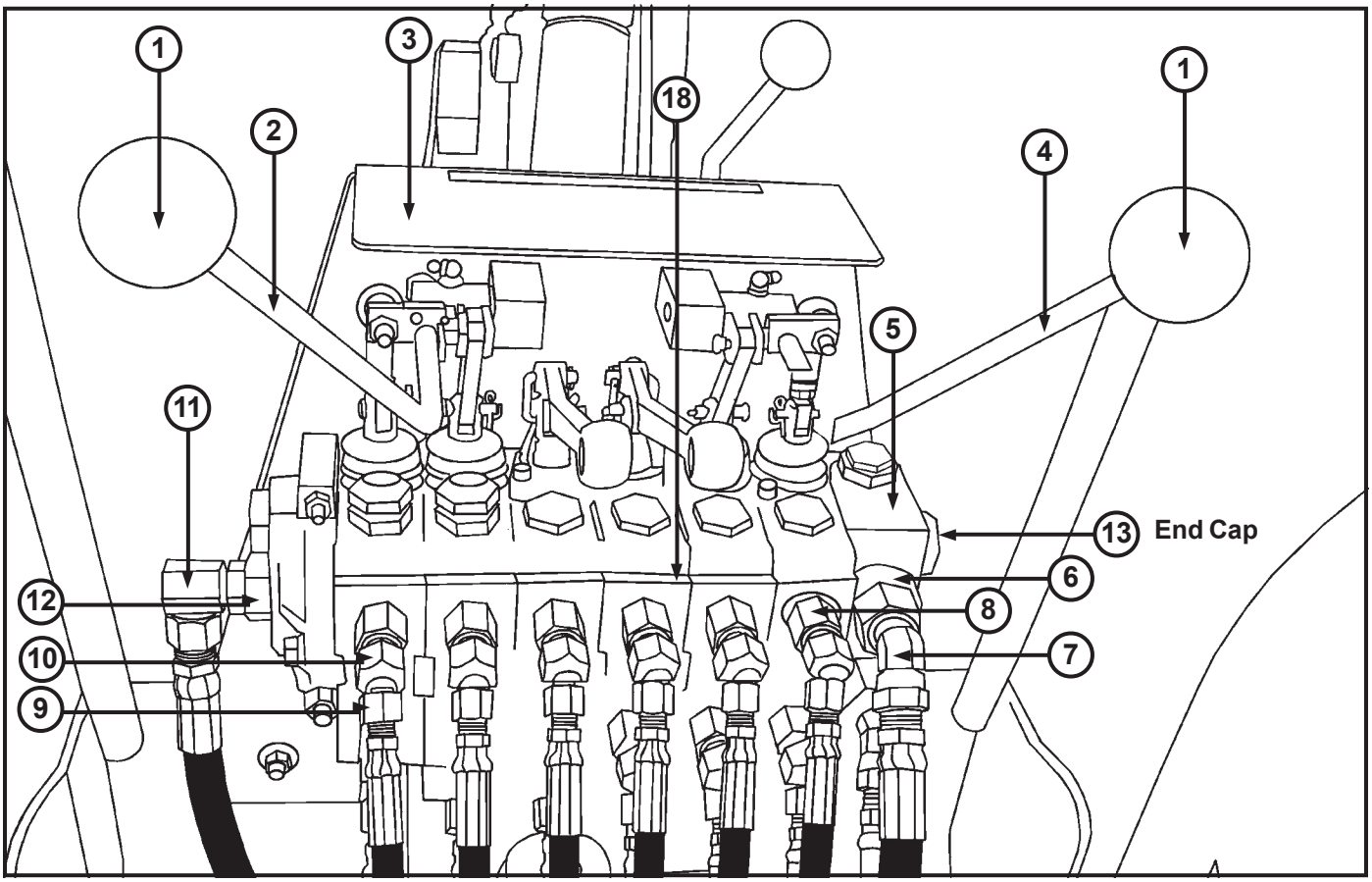

ITEM	PART NUMBER	DESCRIPTION	QTY.
1	13942	Knob	2
2	13073	Handle, Wobblestick, Left Rear	1
3	14050	Decal, Wobblestick & Operator Hazard	1
4	13123	Handle, Wobblestick, Right Rear	1
5	13400	Rear Valve Assembly	1
6	20065	Fitting, #12 x 8" adaptor	2
7	21788	Fitting, #8 x 1/2" x 45°	2
8	25286	Fitting, #8 x 6" adaptor	12
9	21764	Fitting, 3/4" x 1/4" x 45°	9
10	21765	Fitting, Restrictor	3
11	25108	Fitting, #10 x 1/2" x 90°	1
	13444	Block	
12	84029	Power Beyond - Sleeve Kit	
13	85156	End Cap	
14	26002	Restrictor Sets Screws	

Copyright © 2006 Terramite Corporation

Courtesy of Machine.Market

View from Right Rear

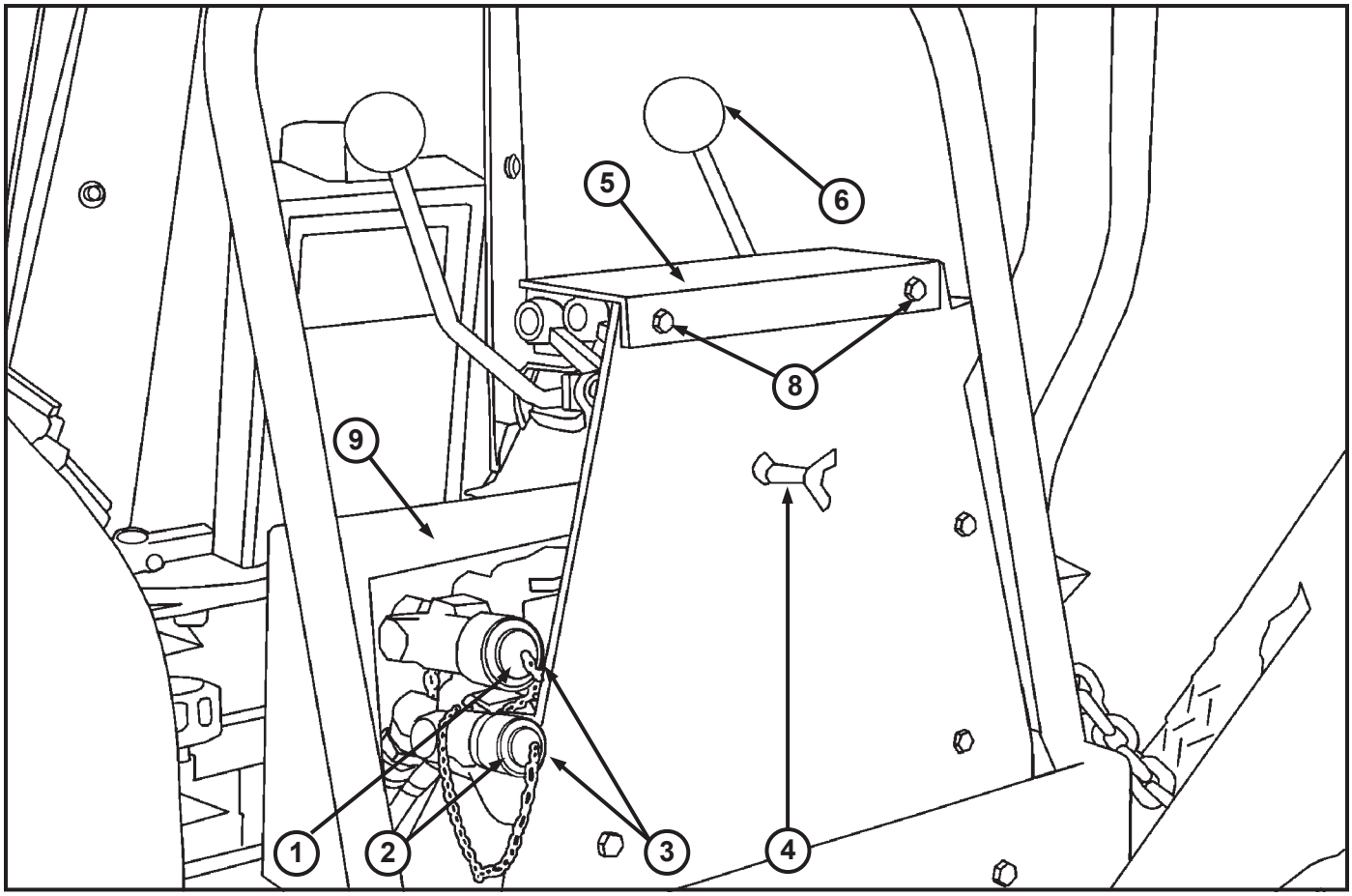

ITEM	PART NUMBER	DESCRIPTION	QTY.
1	25054	Q.A. Plug	1
2	27010	Threaded Q.A. Plug	1
3	28890	Auxiliary P.T.O. Kit	1
NOT SHOWN	21188	Fittings, 1/2" x 90°	2
4	26485	P.T.O. Depress Lever	1
5	14052	Decal Plate For Handle Operations	1
6	13942	Wobblestick Knob	2
7	14005	Maintenance Decal (Gas Only) Located Under Dash Not Shown	1
	14510	Maintenance Decal (Diesel Only) Located Under Dash Not Shown	
8		Bolts	2
9	15017	Hose Cover	

Copyright © 2006 Terramite Corporation

Courtesy of Machine.Market

Gear Pump Part # 66045

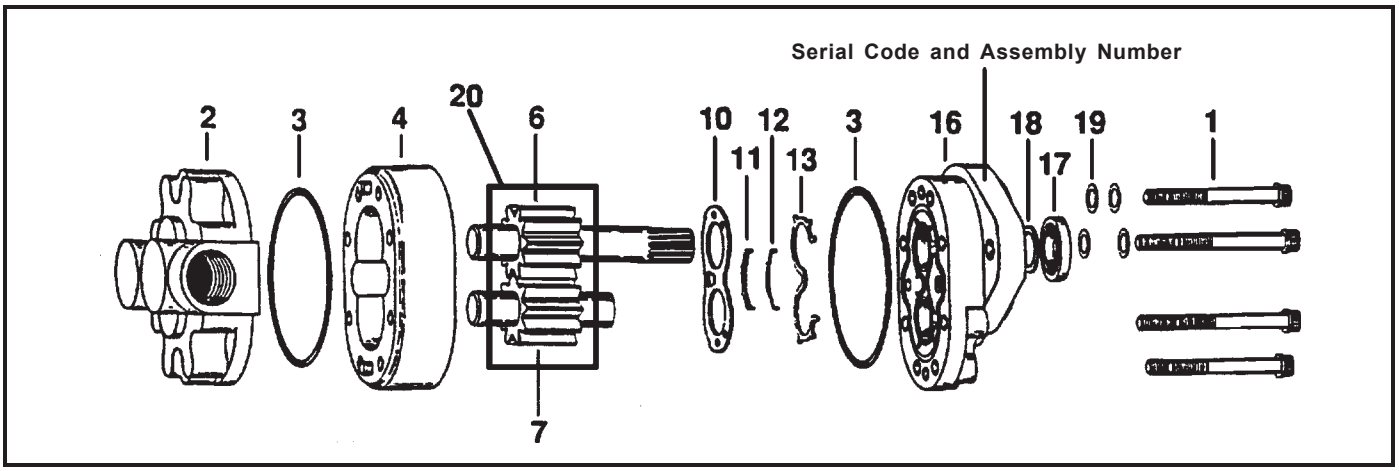

ITEM	PART NUMBER	DESCRIPTION	QTY.
1	NSS*	Cap Screws	8
2	64501	Backplate Assembly	1
3	60464	O-Ring 1/16" x 3"	1
4	64504	Body	1
6	64505	Drive Gear Assembly	1
7	64506	Idler Gear Assembly	1
10	NSS*	Wear Plate	1
11	NSS*	Bearing Seal	1
12	NSS*	Molded O-Ring	1
13	NSS*	Back Up Gasket	1
16	64513	Front Plate	1
17	64514	Seal, Gear Pump, Shaft	1
19	65131	Washer, Gear Pump	4
SP	65101	Seal Repair Kit	1
20	66010	2-Keys	2

NSS* Not Sold Separately

Copyright © 2006 Terramite Corporation

Courtesy of Machine.Market

Rod Assembly

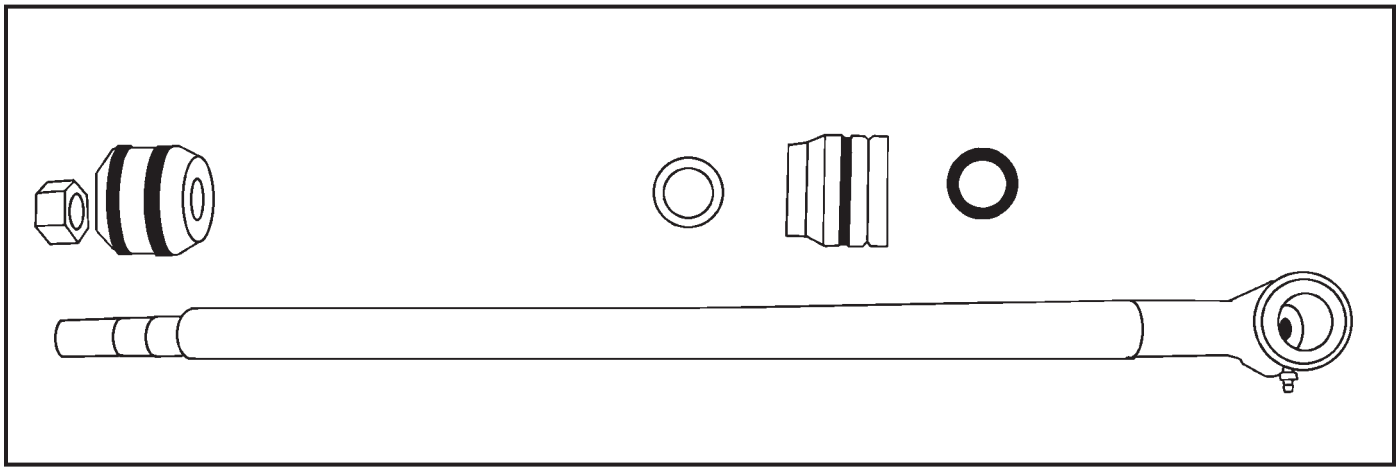

	1 ROD		2 BEARING BLOCK	3 PISTON	4 SEAL KIT
	ROD DIAMETER	PART NUMBER	PART NUMBER	PART NUMBER	PART NUMBER
Arm	1"	22501	22103	21111	21151
Power Steering	1"	25803	22103	21111	21151
Swing	1"	25201	22103	21111	21151
Front Curl	1⅛"	23101	22203	21111	21125
Rear Curl*	1⅛"	20301	22203	21111	21125
Outrigger	1⅛"	21601	22203	21111	21125
Boom Lift	1¼"	21201	82058	23110	21525
Boom Crowd	1¼"	21201	82058	23110	21525
2 inch	1¼"	81048	82104	21111	82051

*Standard

**On machines manufactured before 6-96 part number is 25801 (Previous Part Number 1-58.1).

NOT SHOWN: Rear Curl Rod 1¼" Part Number: 81048

NOTE: All rod assemblies use the same locknut Part Number 23420 (Previous Part Number 1N12FL).

NOTE: Units dated before 4-91 use aluminum pistons in 2" ID Cylinder Barrels only.

Use Seal Kit 2-15.1 (New #82049 for 1" kit-Prior to 4/94 Aluminum)
and 2-15.1125 (New #82050 for 1⅛" kit-Prior to 4/94 Aluminum).

SPECIAL TOOL 21176 Spanner wrench for cylinder repair

Copyright © 2006 Terramite Corporation

Courtesy of Machine.Market

Hydrastatic Transmission

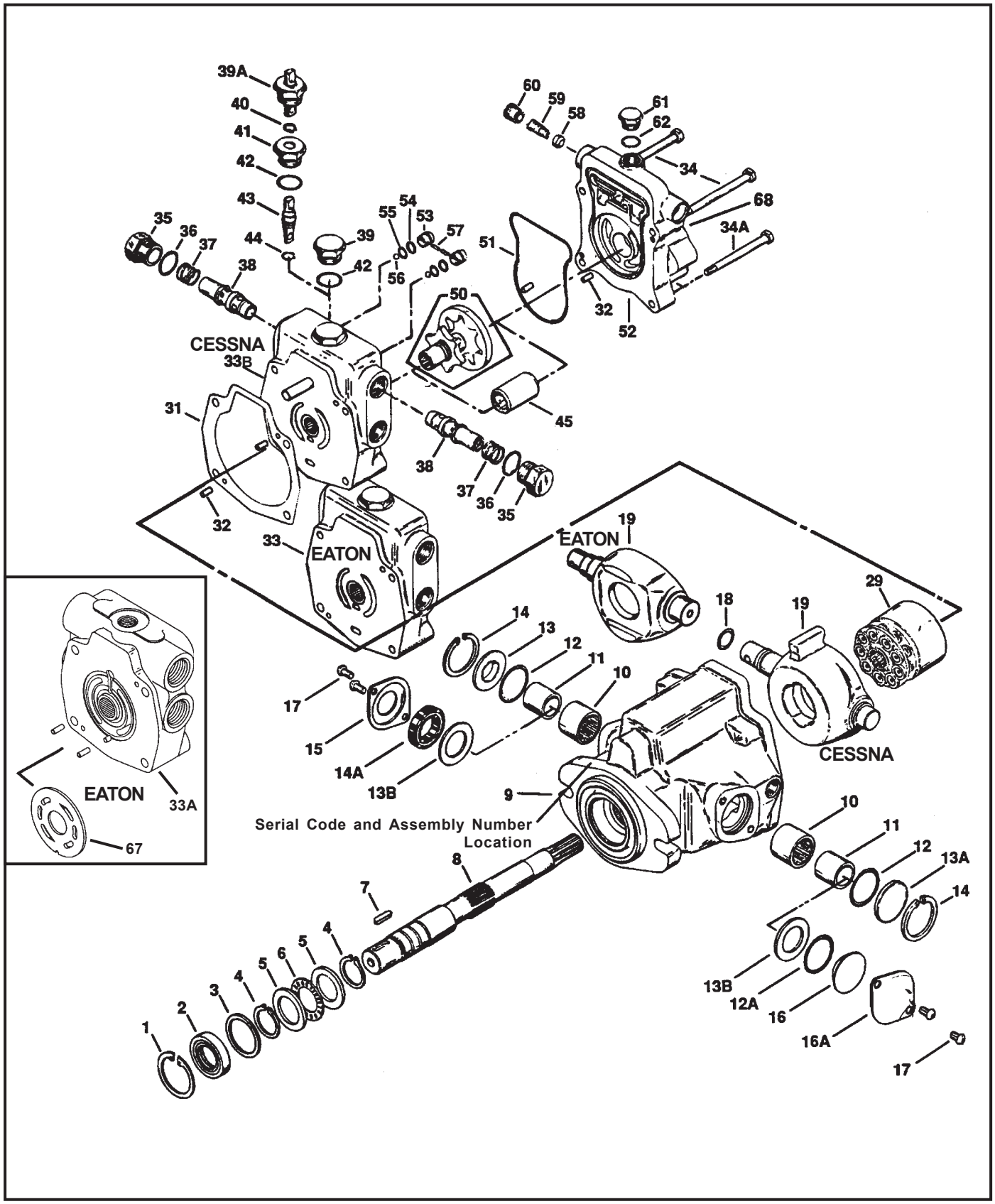

***PLEASE PROVIDE SERIAL NUMBER OF MACHINE WHEN ORDERING ANY COMPONENT PARTS.**

Copyright © 2006 Terramite Corporation

Courtesy of Machine.Market

ITEM	PART NUMBER	DESCRIPTION	QTY.
1	60401	Retaining Ring	1
2	60402	Shaft Seal	1
3	60403	Washer	1
4	60404	Retaining Ring	2
5	60405	Bearing Race	2
6	60406	Bearing, Thrust	1
7	60471	Key	1
8	60407	Drive Shaft	1
9	60409	Housing Assembly	1
10	60410	Bearing	2
11	60411	Inner Race	2
12	60412	O-Ring, 3/32" x 15/16", Outer Pintle	2
13	60465	Sleeve Cover	1
13A	60415	Trunnion Cover	1
13B	60561	Washer	1
14	60414	Retaining Ring	2
14A	60562	Seal, Pintle	1
15	60418	Seal Cover	1
17	60564	Screws, Trunnion Cover	2
18	60516	O-Ring, Outer Pintle	1
19	60517	Camplate, For Eaton Trans.	1
19	60417	Camplate, For Cessna Trans.	1
29	60422	Rotating Kit Assembly	1
31	60429	Housing, Gasket	1
33	60533	Backplate Assy., Eaton, with Power Steering	1
33A	60535	Backplate Assy., w/valve plate, Eaton	1
33B	60432	Backplate Assy., Cessna, without Power Steering	1
35	60436	Plug Assembly	2
36	60435	O-Ring 3 3/32" x 7/8" ID, Back Plate	1
37	60434	Spring, Transmission, Relief Valve	2
38	60467	Relief Valve Assembly	2
39	60433	Plug Assembly	1
40	60440	Retaining Ring	1
41	60441	Separator Plug	1
42	60442	O-Ring, 3 3/32" x 7/8"	1
43	60454	Spreader	1
44	60437	O-Ring, 1/16" x 3/8"	1
45	60443	Coupler	1
50	64050	Gerotor and Coupler	1
51	60449	O-Ring, Molded	1
52	60453	Adapter Assembly without Power Steering	1
	60553	Adapter Assembly with Power Steering	
	64058	Adapter Assembly with Power Steering - Diesel	
53	60450	Check Valve Assembly	2
54	60452	Back Up Washer	2
55	60455	O-Ring, 1/16" x 7/16"	2
56	60456	Steel Ball	2
57	60457	Pin	2
58	60461	Poppet Filter Relief	1
59	60463	Spring	1
60	60560	Spring Retainer	1
61	60469	Plug Assembly	1
62	60466	O-Ring, 3 3/32" x 41/64"	1
64	60464	O-Ring, 1/16" x 3 1/4"	1
65	60465	Cover Plate	1
66	60459	Cap Screw	2
67	60534	Plate, Valve	1
*S	64100	Seal Repair Kit, Cessna	1
*S	64101	Seal Repair Kit Eaton	1
*S	60043	Rotating Rebuild Kit, Cessna	1
*S	60564	Screws, Trunnion Cover	2
68	60464	O-Ring in Back	1

Copyright © 2006 Terramite Corporation

Courtesy of Machine.Market

Hydraulic Main Power Circuit (shown is for gas model)

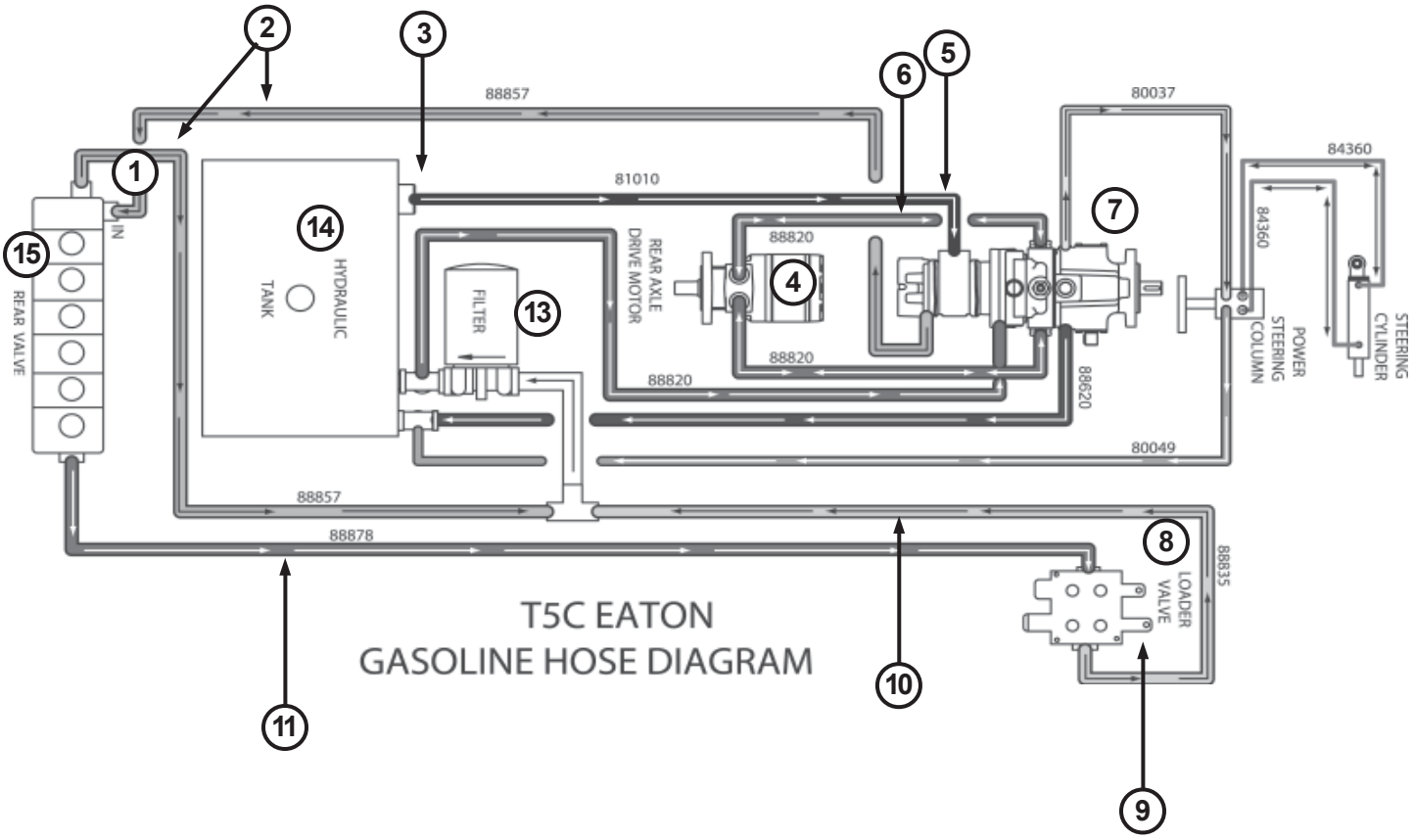

ITEM	PART NUMBER	PREVIOUS PART NUMBER	DESCRIPTION	QTY.
1	13429		Main Relief Rear Valve	1
2	88857		Hose 1/2" x 57" (back valve section)	2
3	22201		Filter, Strainer (Inside Tank)	1
4	64003		Drive Motor	1
5	81012		Hose, 3/4" x 12" (back valve section) Prior to 11-92	1
	81010		Hose, 3/4" x 12" (back valve section) After 11-92	
6	88820		Hose, 1/2" x 20" (back valve section)	3
7	66005		Transmission Gasoline Type	1
	66006		Transmission Diesel Equipped	
8	13900		Valve Loader	1
9	13943		Loader Circuit Relief Valve	1
10	88836		Hose, 1/2" x 36" (back valve section)	1
11	88878		Hose, 1/2" x 78" (back valve section)	1
12	88620		Hose, 3/8" x 20" (back valve section)	1
13	21002		Filter, Hydraulic	1
14	22204		Cap, Hyd. Breather Filter w/Dipstick	1
15	13400		Rear Valve Assembly	1

Continued On Next Page

Copyright © 2006 Terramite Corporation
Courtesy of Machine.Market

Loader Circuit

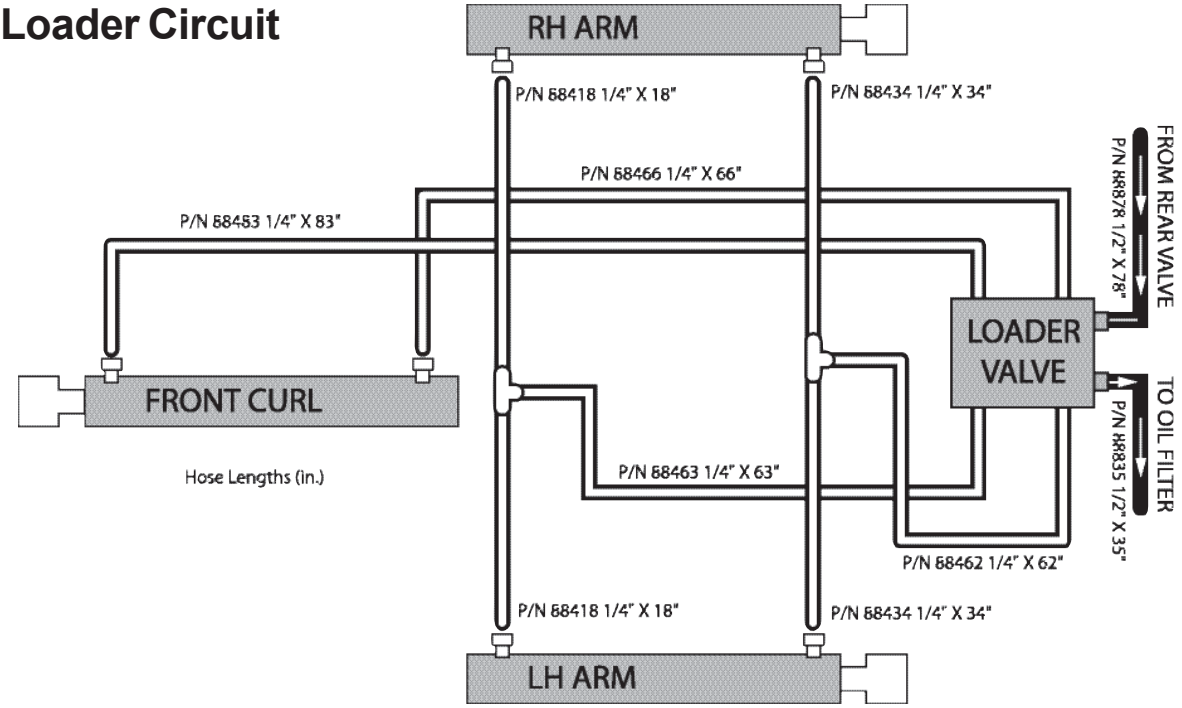

Hydraulic Main Power Circuit (Continued)

HYDRAULIC FILTER TYPES:

PARKER	921999
NAPA	1551-1259
WIX	51551
FRAM	P-1653
AC	PF16
BALDWIN	BT-839-10

HOSE TYPES:

3/8" 2 WIRE BRAID MP6-6 & MB6-6F
1/2" 2 WIRE BRAID NPT
3/4" SUMP LINE HOSE

OIL:

ABOVE 40°F - API 15W-40 SF/CC/CD
BELOW 40°F - API 10w SF/CC/CD

WARNING: USE ONLY 2 WIRE BRAID HOSES AS SPECIFIED ABOVE. SYNTHETIC OR OTHER TYPES OF HOSES MAY FAIL CAUSING SERIOUS INJURY OR DEATH.

WARNING: DO NOT USE ORDINARY HYDRAULIC OIL OR MAJOR DAMAGE TO TRANSMISSION AND MOTOR WILL RESULT.

NOTE: For Diesel, switch hoses marked A and B

Copyright © 2006 Terramite Corporation

Courtesy of Machine.Market

Model T5c Backhoe Hyd. Circuit Wobblestick Hose Diagram (2WD)

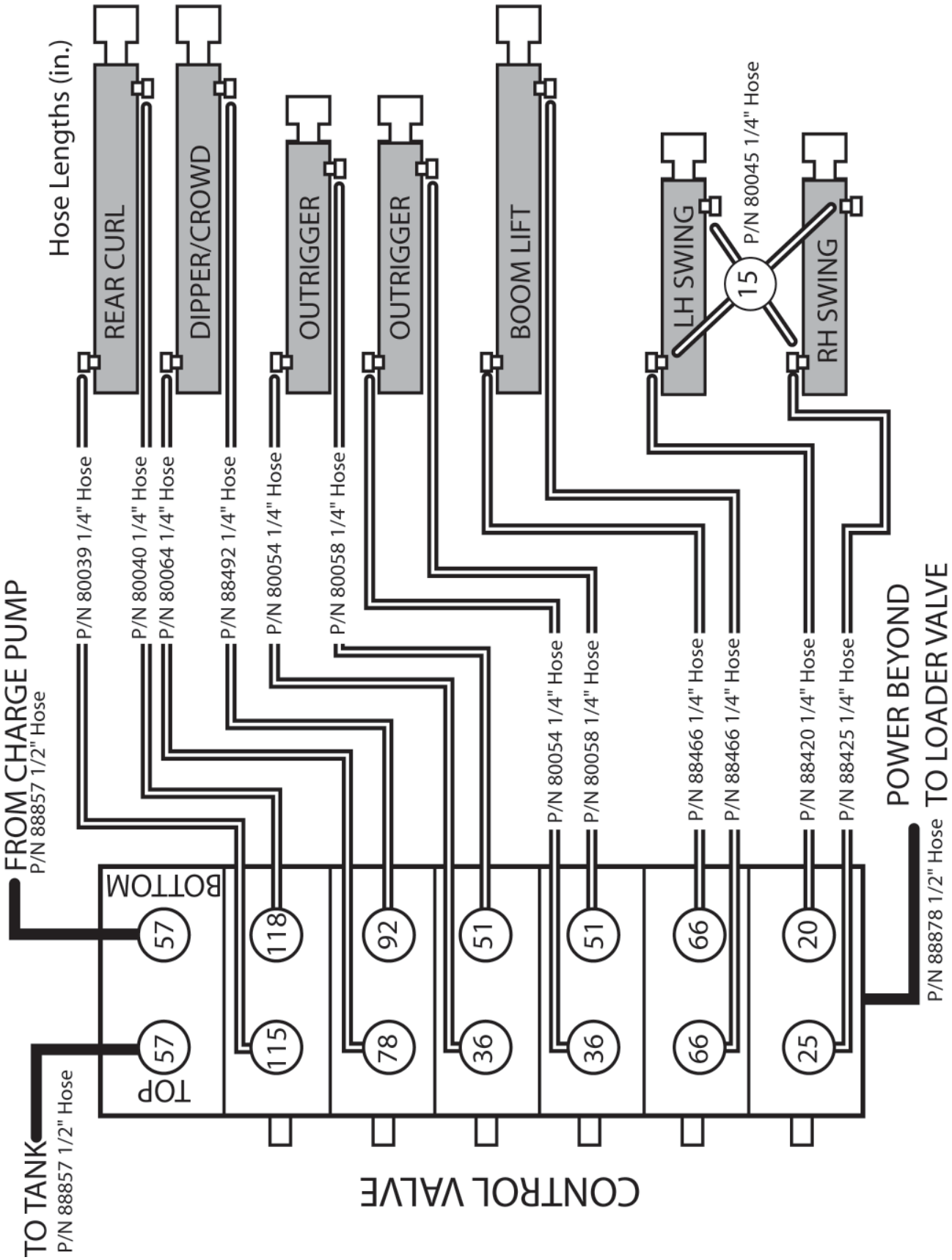

Copyright © 2006 Terramite Corporation
Courtesy of Machine.Market

MAB/MAE Torquemotor Exploded Assembly View

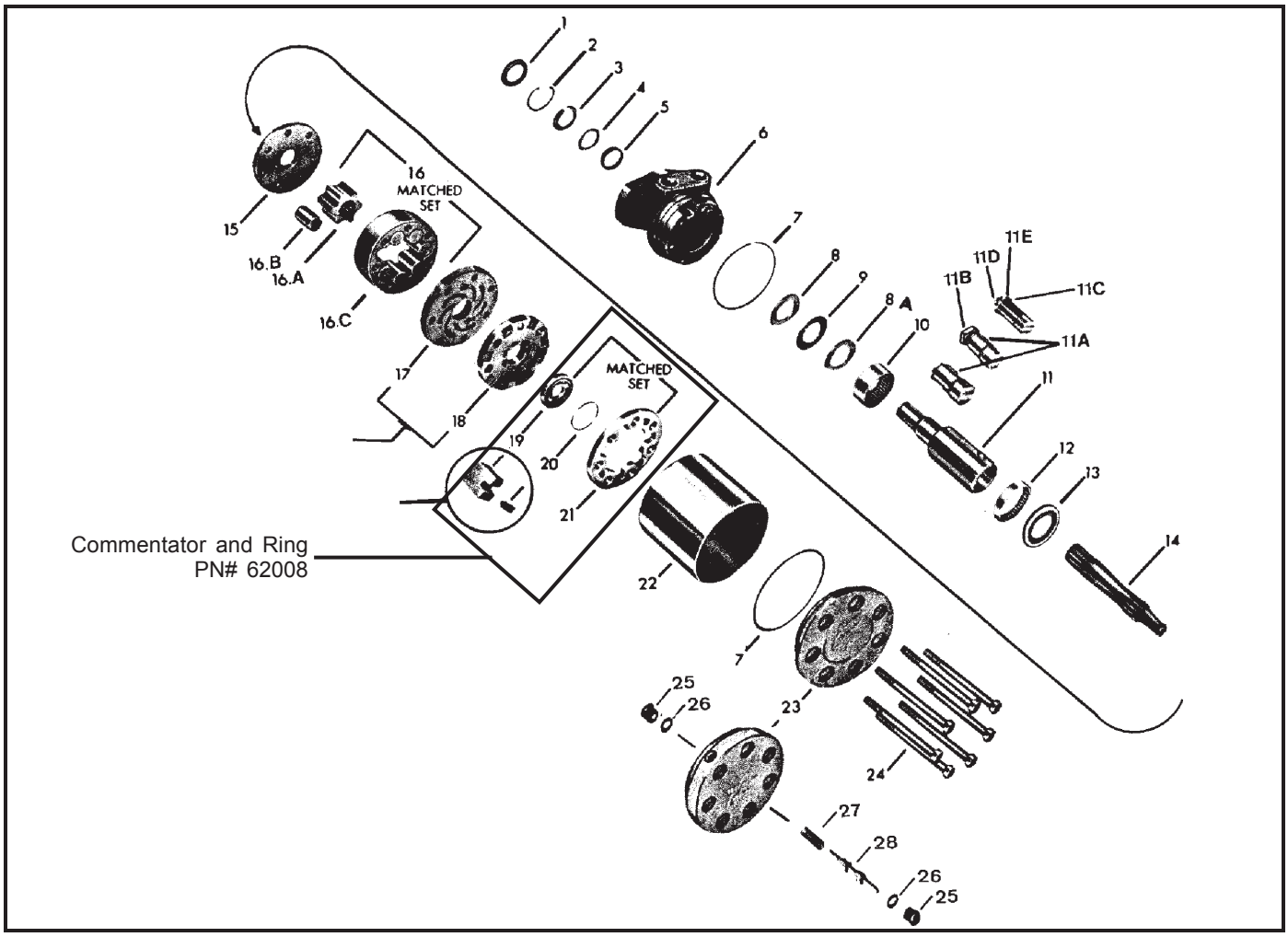

ITEM	DESCRIPTION	ITEM	DESCRIPTION	ITEM	DESCRIPTION
1	Seal	11B	Nut	17	Manifold Plate
2	Retaining Ring	11C	Washer	18	Manifold
3	Back-Up Washer	11D	Bolt	19	Commutator
4	Washer	11E	Lock Washer	20	Seal Ring
5	Seal	12	Bearing	21	Commutator Ring
6	Housing	13	Thrust Bearing	22	Sleeve
7	Seal Ring (2)	14	Drive Link	23	End Cover Assembly
8	Thrust Washer	15	Wear Plate	24	Special Bolt (7)
8A	Thrust Washer	16	Rotor Set	25	Plug
9	Thrust Bearing	16A	Rotor	26	O-Ring
10	Bearing	16B	Vane (7)	27	Sping
11	Coupling Shaft	16C	Stator	28	Valve (Shuttle)
11A	Key				

Copyright © 2006 Terramite Corporation

Courtesy of Machine.Market

Power Steering Column Exploded Assembly View

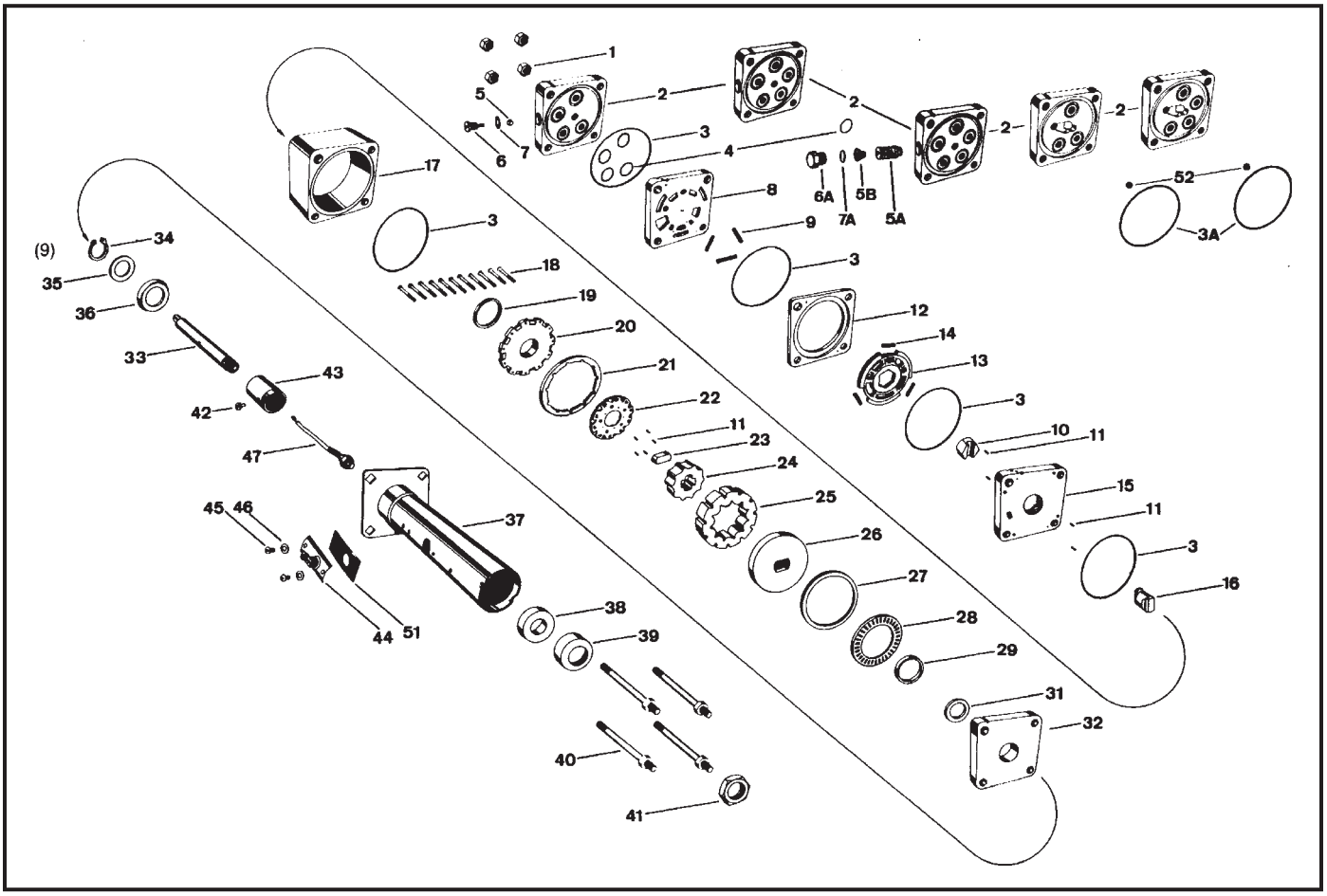

ITEM	DESCRIPTION	ITEM	DESCRIPTION	ITEM	DESCRIPTION
1	Nut 5/16 UNF 24 (4)	14	Spring, 1/2 Inch (13mm) (3)	33	Input Shaft/Wheel Tube
2	Port Cover	15	Isolation Manifold	34	Retaining Ring
3	Seal Ring (5)	16	Drive Link	35	Washer-Retaining Plate
3A	Seal Ring (White)	17	Metering Ring	36	Retaining Plate } Matched Set
4	O'Ring (3), (4) or (5)	18	Screw, Hex Socket Hd (11)	37	Upper Cover & Jacket Assy. } Matched Set
5	Ball-7/32 inch (6mm) dia.	19	Seal, Commutator	38A	7/8 Bushing
5A	Relief Valve Cartridge	20	Commutator Cover	38B	3/4Bushing
5B	Coil Spring	21	Commutator Ring	39	Seal
6	Plug	22	Commutator	40	Special Bolt, 5/16 24UNF-2A
6A	Hex Plug	23	Spacer-Drive Link	41	Nut
7	O'Ring, Plug & O'Ring Assy.	24	Rotor } Matched Set	42	Screw
7A	O'Ring	25	Stator } Matched Set	43	Contact Ring Assy.
8	Port Manifold	26	Drive Plate	44	Contact Brush Assy.
9	Spring, 3/4 inch (19mm) (3)	27	Spacer-Trust Bearing	45	Screw & Lock Washer
10	Hex Drive Assy.	28	Thrust Bearing	46	Washer [for 1 1/2 inch (38 mm) Jacket]
11	Alignment Pin (Needle Brg.) (9)	29	Face Seal	47	Horn Wire Cable Assy.
12	Valve Ring } Matched Set	31	Seal Spacer	51	Spacer [for 1 1/2 inch (38 mm) Jacket]
13	Valve Plate } Matched Set	32	Upper Cover Plate	52	Ball 9/32 inch (22mm)

Items #44, 45, 46, 51 are not part of HGF service assembly unit. They must be purchased as separate items of order.

Copyright © 2006 Terramite Corporation

Courtesy of Machine.Market

Schematic-View of Backhoe Control Valve Assembly

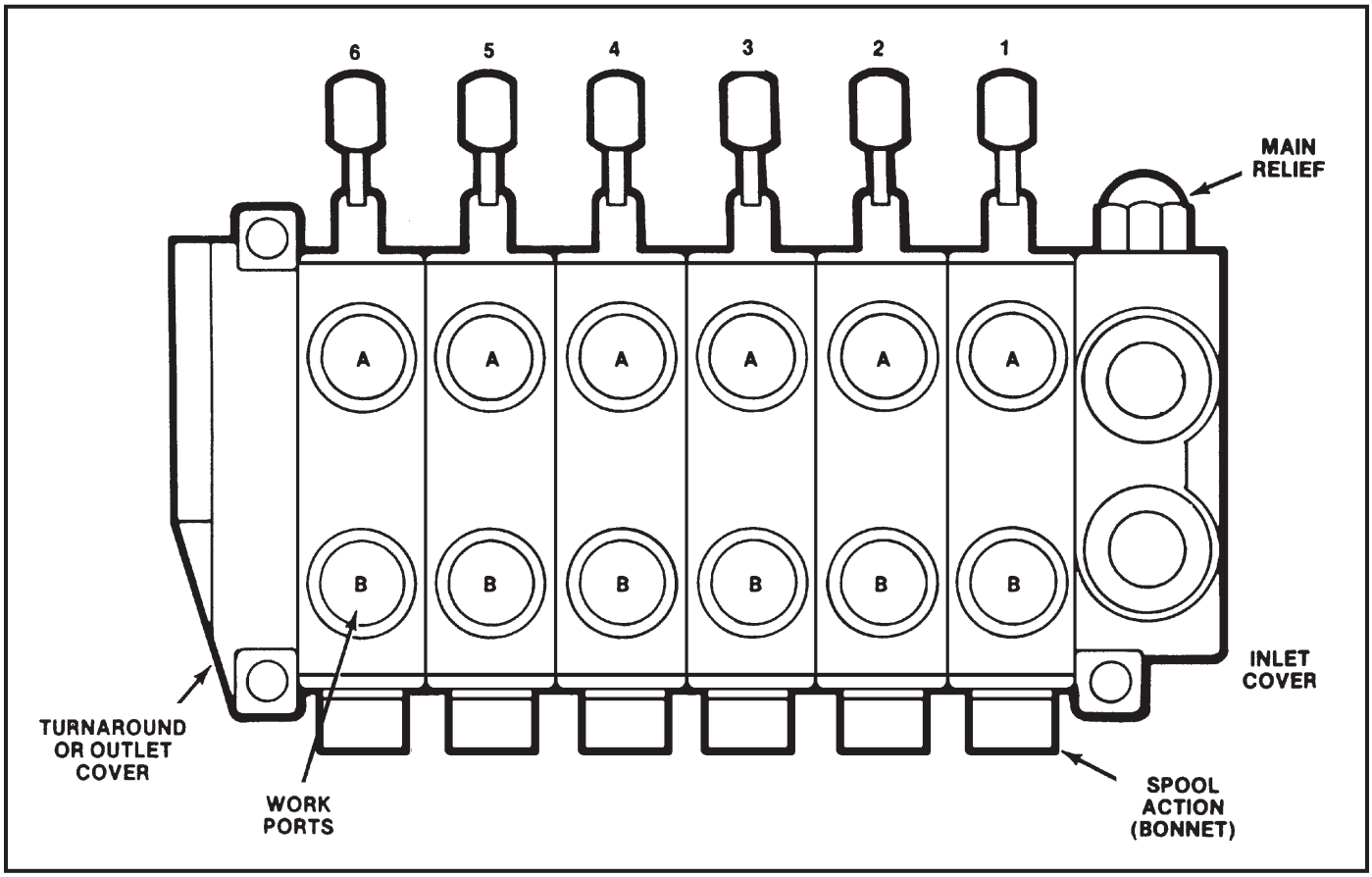

1. Before disassembly, it is suggested that each valve section be marked numerically to avoid incorrect reassembly.
2. Remove three assembly stud nuts from the left end section using a 9/16" thin wall socket.
3. Remove valve sections by sliding from assembly studs.

Copyright © 2006 Terramite Corporation

Courtesy of Machine.Market

Parts Ordering Information

As of April 1, 1991, the section seals for the V20 changed. The new versions have larger cross section (old was .070, new is .103) and different configurations for open center and closed center sections. The old design utilized the same seals for all versions (two .801 I.D. and two .926 I.D.). The new design uses one configuration for open center (three .924 I.D. and one .799 I.D.) and another configuration for closed center, load sensing and all outlet covers (two .924 I.D. and two .799 I.D., with one .237 I.D. for load sensing).

The following charts is provided to aid in selection of the proper seals. It is important to note that the seal kits include all O-rings (new and Old), therefore there will be some left unused.

V20 SEAL IDENTIFICATION CHART

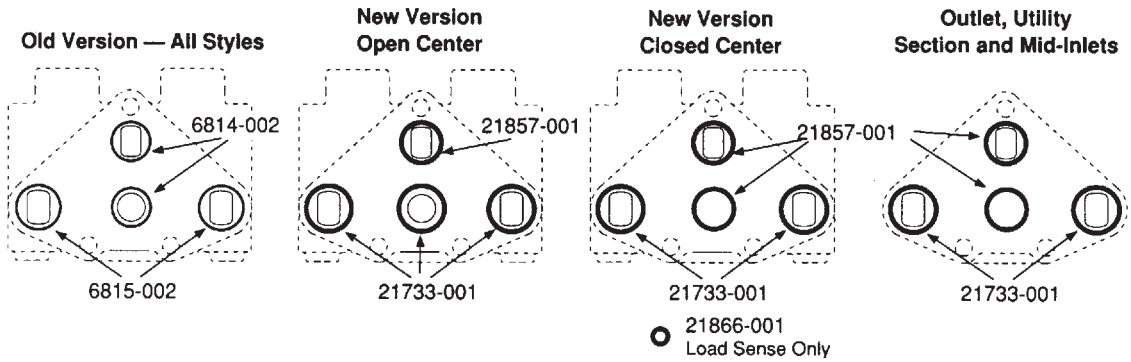

The following section seals are included in the Kits:

Standard Kits		Viton Kits	
Old	New	Old	New
(2)6814-002	(2)21867-001	(2)7450-001	(2)9003-117
(2)6815-002	(3)21733-001	(2)7451-001	(3)9002-119
Load sensing kits (additional seals)			
(1)8316-001	(1)21866-001	(1)9002-011	(1)9002-108

Seal kit changes.

K-6121 Section Seal Kit, One Section
K-6027 Complete Seal Kit, 3 or 4 Way Section
K-6028 Complete Seal Kit, 4 Way Float Section
K-6209 Complete Seal Kit, Series 3 or 4 Way Section
K-6210 Complete Seal Kit, Series 4 Way Float Section
K-6154 Complete Seal Kit, Load Sensing 4 Way Float
K-6155 Complete Seal Kit, Load Sensing 3 or 4 Way Section
K-6156 Section Seal Kit, Load Sensing-One Section
K-6160 Viton Section Seal Kit, One Section

*Complete Seal Kits include spool seals and O-rings for check plugs.

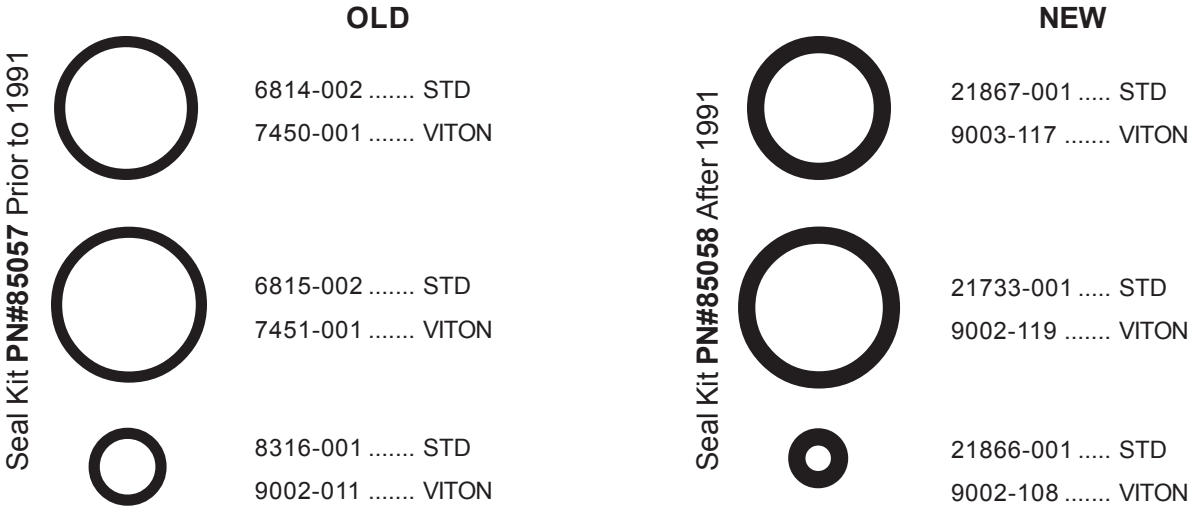

THESE SEALS ARE NOT INTERCHANGEABLE. OLD AND NEW STYLE SECTIONS MAY BE USED IN THE SAME ASSEMBLY PROVIDED THE CORRECT SEALS ARE USED FOR EACH SECTION.

Copyright © 2006 Terramite Corporation

Courtesy of Machine.Market

Loader Valve

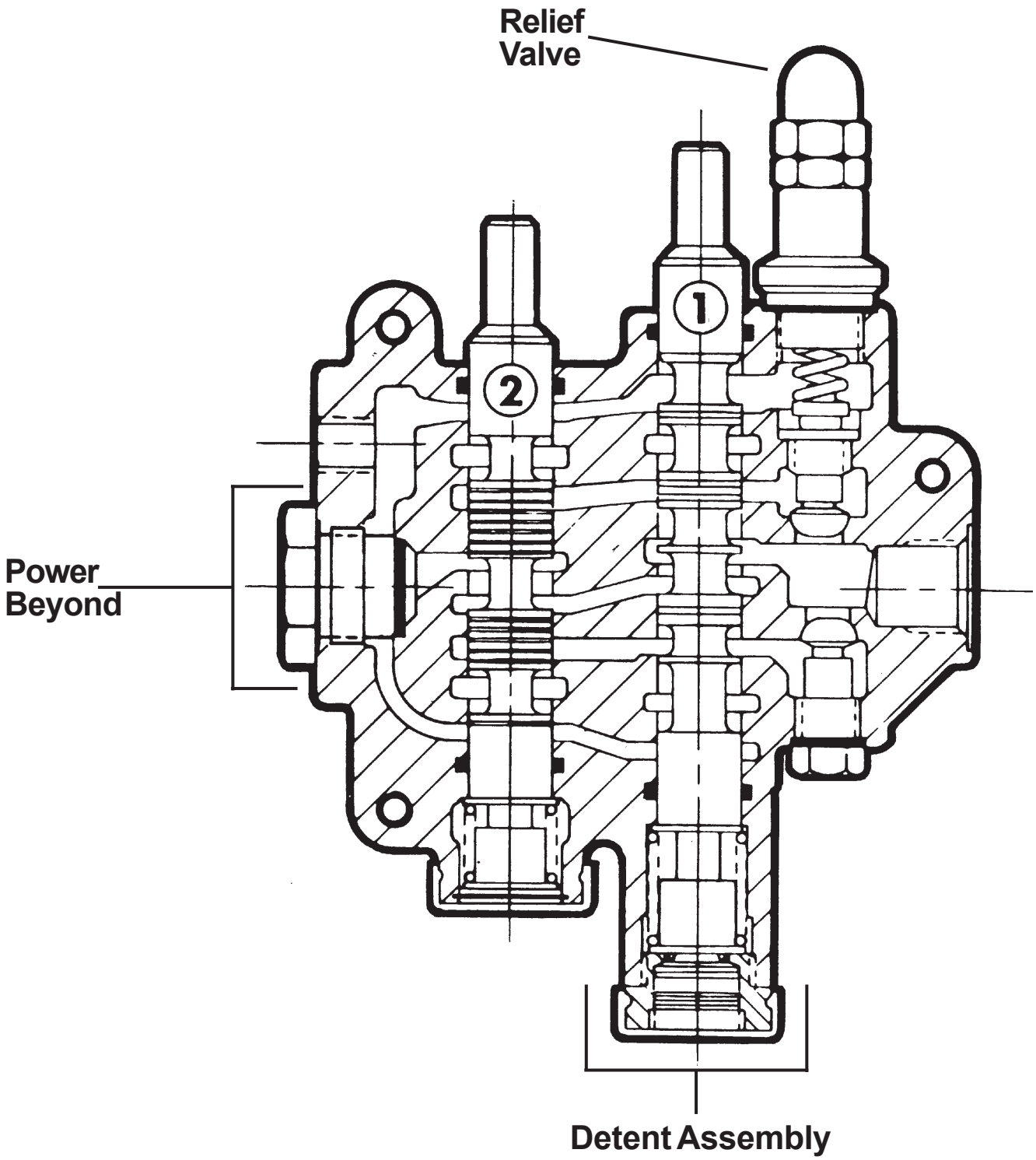

1. Raise and Lower Control Section
2. Curl and Dump Section

Copyright © 2006 Terramite Corporation

Courtesy of Machine.Market

4-Way, 3-Position Valve Section

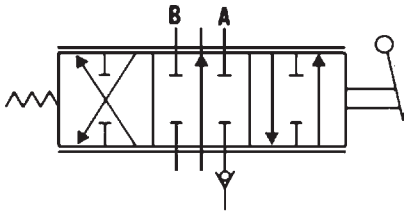

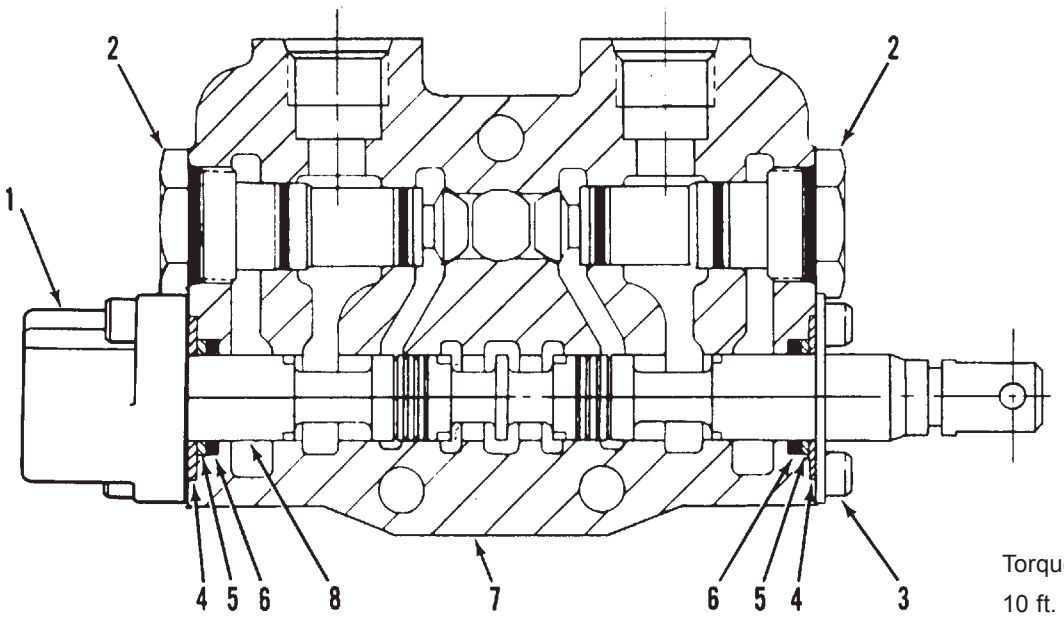

Torque to
10 ft. lbs. [13,6 Nm]

ITEM	DESCRIPTION	QTY. PER SECTION
1	Positioner, Spool, Standard	1
2	Check, Load	2
3	Retainer Assembly, Standard, Includes Screws	1
4	Retainer, Plate Washer	2
5	Washer, Back-Up (See Note 1)	2
6	Seal, O-Ring (See Note 1)	2
7	Housing, Standard (See Note 2)	1
8	Spool, 4-Way (See Note 2)	1

Notes:
1. Seal and washer not sold separately. Order Seal Kit.
2. These are matched parts and are not sold separately.

Buna-N seals are standard for all Gresen valve assemblies. Optional Viton seals are available.

Copyright © 2006 Terramite Corporation

Courtesy of Machine.Market

Load Check Plug Assembly

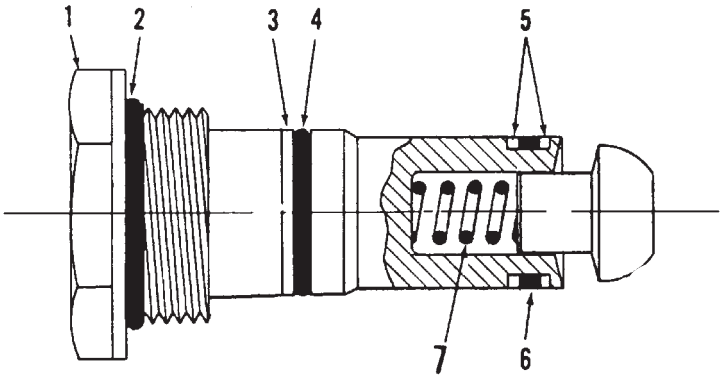

Torque Load Check Plug Assembly to 20 ft. lbs. [27 Nm].

ITEM	DESCRIPTION	QTY. PER PLUG ASSEMBLY
	Replacement Load Check Plug Assembly	
	Seal Kit, (Contains Items 2, 3, 4, 5 & 6)	
1	Plug, Lift Check, Steel (Heavy Duty)	1
2	Seal, O-Ring	1
3	Washer, Back-Up, Outer	1
4	Seal, O-Ring, Outer	1
5	Washer, Back-Up, Inner	2
6	Seal, O-Ring	1
7	Spring, Lift Check	1

Not Sold Separately

High Pressure Relief

For Installation: Torque Relief Valves Assembly to 45 ft. lbs. [61 Nm]

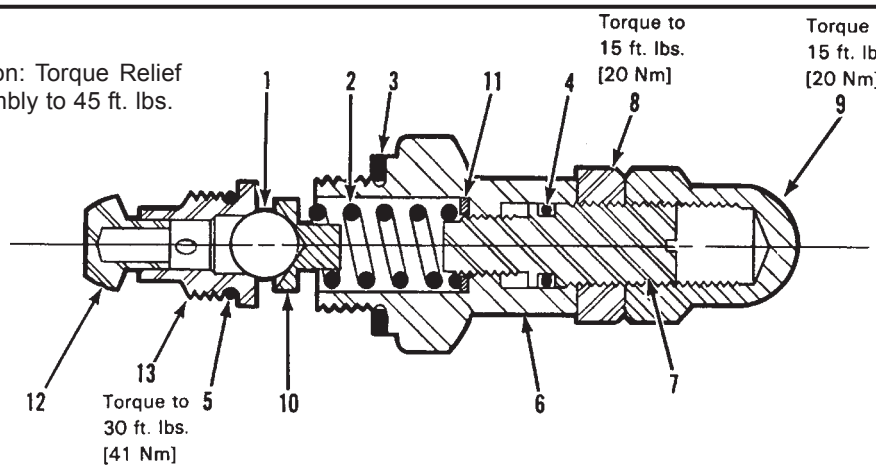

ITEM	DESCRIPTION	QTY. PER PLUG ASSEMBLY
1	Ball	1
2	Spring, Relief (Models SPK & SSK only)	1
	Spring, Relief (Models SPK & SSK only)	
3	Gasket, Relief Body	1
4	O-Ring, Adjusting Screw	1
5	O-Ring, Valve Seat	1
6	Body	1
7	Screw, Adjusting	1
8	Nut, Jam, Adjusting Screw	1
9	Nut, Acorn Cap	1
10	Guide, Spring	1
11	Washer, Spacer (SP)	1
	Washer, Spacer (SPK)	2
12	Poppet, Check	1
13	Seat, Valve	1

Copyright © 2006 Terramite Corporation

Courtesy of Machine.Market

Terramite Suggests Keeping a Current Journal on Replacement Parts for Quick Reference or Field Notes on Your Machine

Remember to Read, Understand and Follow Your Operator's Handbook on Safety and the Correct Procedure for Safe Operation and Handling of Your Compact Tractor Loader Backhoe.

Copyright © 2006 Terramite Corporation

Courtesy of Machine.Market

Manual Box, Manual and Read Operator's Book First Must be on Machine

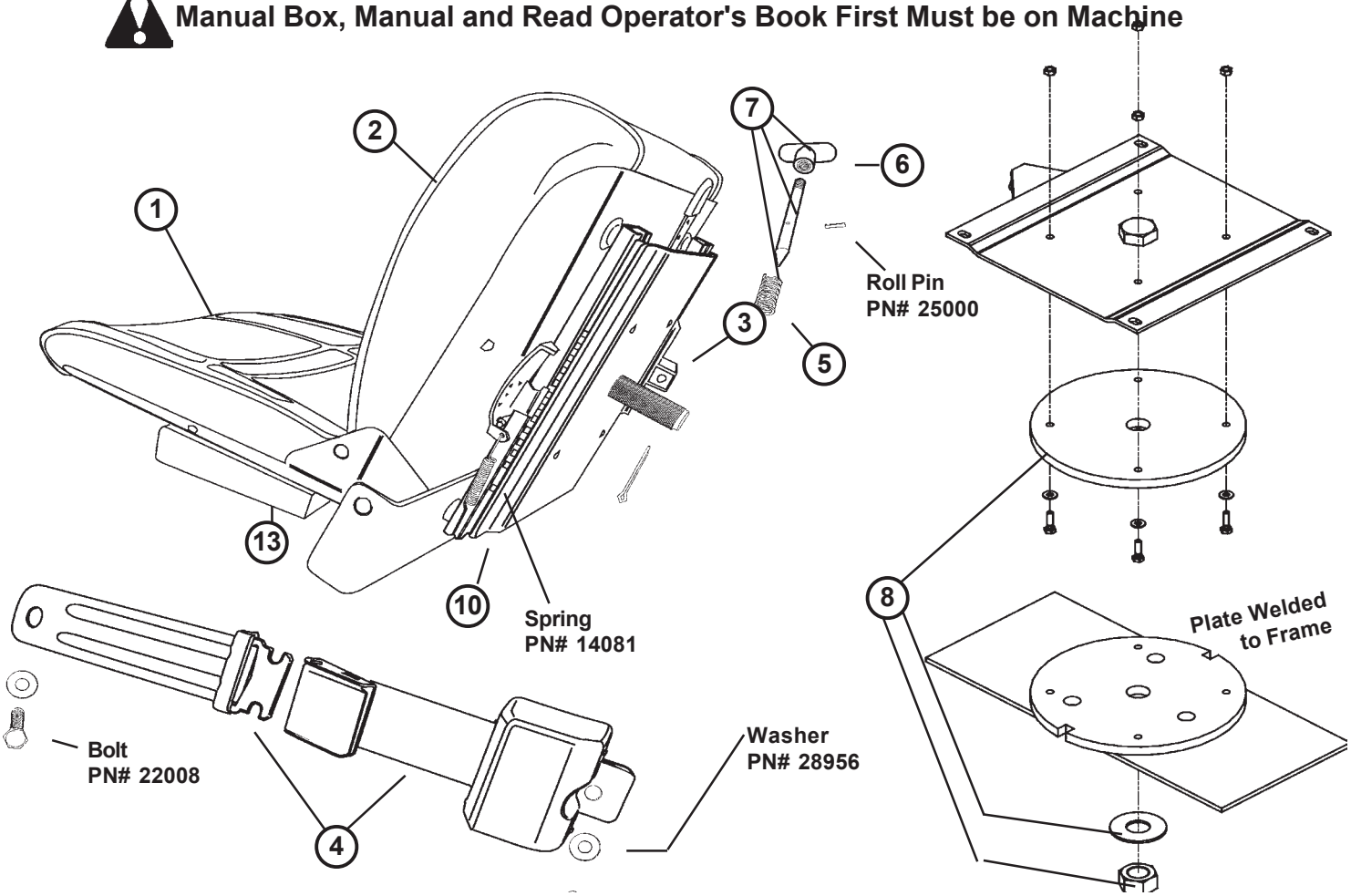

ITEM	PART NUMBER	DESCRIPTION	QTY.
1	11981	Seat Cushion, Back	1
2	11904	Seat Cushion, Bottom	1
3	14259	Seat Assembly, Swivel	1
4	11903	Seat Belt Assembly (Both Halves)	1
5	26000	Spring	1
6	14011	Handle	1
7	14066	Handle Assembly	1
8	22010	Nut 1" NF Z Jam	1
	22084	Washer/ Flat 1" USS #17962	1
	53160	Cotter Pin	1
	14018	Plastic Disc	1
9	14062	Seat Rails with Handles - Not Shown	2
10	14063	Seat Rails	2
11	14013	Seat Assembly without Bearings - Not Shown	1
12	14219	Update Kit for Older Seats (Prior to 7-1-96) - Not Shown	1
13	11911	Manual Box	1
14	14046	Decal, Read Owner's Manual - See section four for decal information	1

Seat Swivel Bearing (Used Prior to 7-1-96)

ITEM	PART NUMBER	DESCRIPTION	QTY.
NOT SHOWN	14217	Seat Bearing Prior to 7-1-96	1
NOT SHOWN	14219	Seat Assembly with Bearing Prior to 7-1-96	1

Copyright © 2006 Terramite Corporation

Courtesy of Machine.Market

Components

Exploded View of Front End Loader

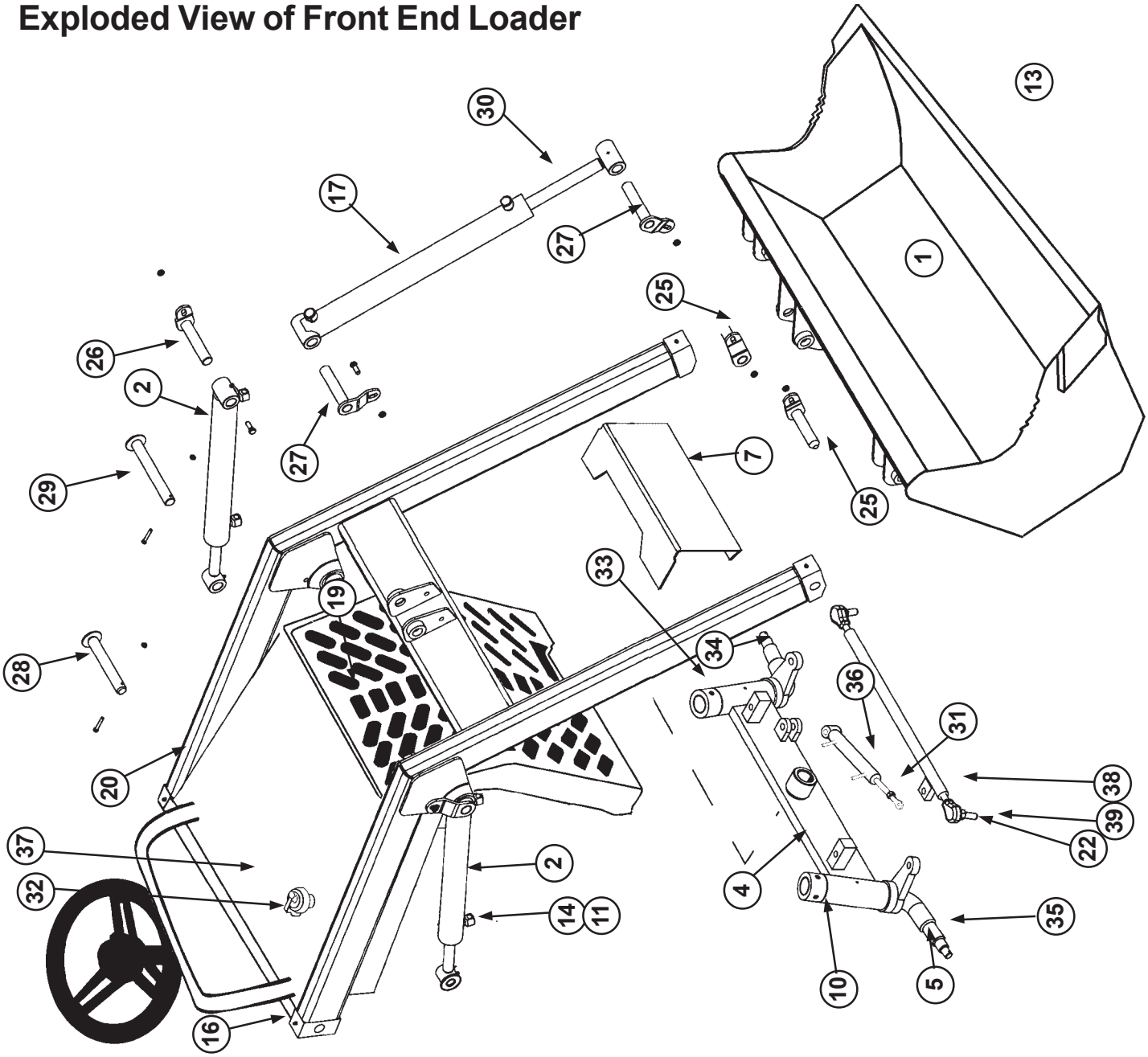

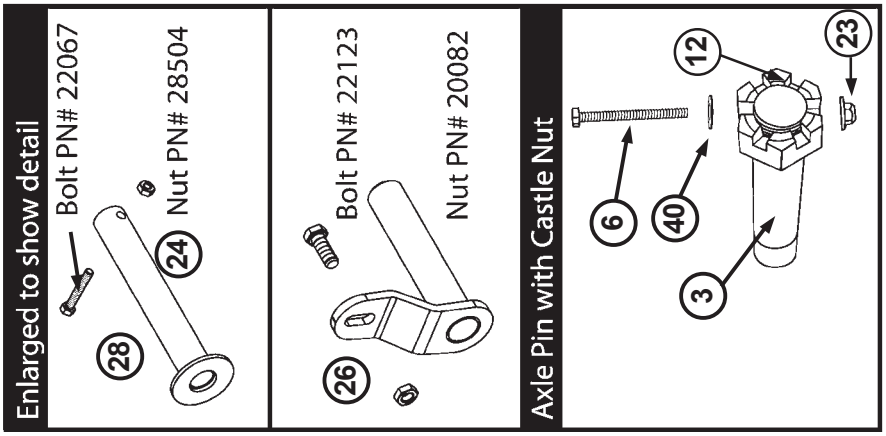

Copyright © 2006 Terramite Corporation

Courtesy of Machine.Market

ITEM	PART NUMBER	DESCRIPTION	QTY.
1	13300	48" Loader Bucket	1
	13356	56" Loader Bucket	
2	22500	Arm Cylinder	2
3	15405	Axle Pin 11/8"	1
	15407	Axle Pin 11/4"	
4	53075	Axle Weldment prior to SN 5960601	1
	53212	Axle Weldment after SN 5960601	
	53201	Axle Weldment	
5	53090	Bearing, Thrust prior to SN 5960601	2
	53091	Bearing, Thrust after SN 5960601	
6	15013	Bolts	2
7	53220	Bumper	1
8	22146	Bumper Bolts	2
9	28500	Bumper Nuts	2
10	53106	Bushing Spindle after SN 5960601	2
	53175	Bushing Spindle	
11	20177	Button Fittings, Hydraulic	26
12	53081	Castle Nut 11/4" I.D.	1
	53080	Castle Nut 11/8" I.D.	
13	13303	Cutting Edge 48" (Weld-on)	1
	13056	Cutting Edge 56" (Weld-on)	
14	23174	Fitting, 1/4" x 45°	2
15	20174	Fitting, 1/4", Hydraulic Hose (Not Shown)	26
16	21428	Fitting, Grease	32
17	23100	Front Curl Cylinder	1
18	15600	Grill Assembly (Not Shown)	1
19	77072	Headlight Assembly	1
20	12062	Loader Arm Assembly(resale)	1
21	42023	Muffler, 20 HP Kohler Engine (Not Shown)	1
22	28502	Nut, 1/2" NF Jam prior to SN 5960601	1
	28503	Nut, 5/8" NF Jam after SN 5960601	
23	20082	Nut, 3/8" NC Flange	24
24	28504	Nuts	2
25	13200	Pin, 1" x 43/4" Loader Bucket	2
26	12600	Pin, 1" x 51/4", Arm Cylinder	2
27	13000	Pin, 1" x 51/4", Front Curl Cylinder	2
28	12300	Pin, 1" x 67/8", Loader Arm	2
29	12301	Pin, 1" x 77/8", Arm Cylinder Rod	2
30	23101	Rod, F. Curl	1
31	25801	Rod, Power Steering prior to SN 5960601	1
	25803	Rod, Power Steering after SN 5960601	
32	11282	Safety Fuel Cap	1
33	26500	Screw, Set prior to SN 5960601	4
	28501	Screw, Set after SN 5960601	
34	53050	Spindle, L	1
	53103	Spindle, L 11/4" prior to SN 5960601	
	53104	Spindle, L 13/4" after SN 5960601	
35	53113	Spindle, R 11/4" prior to SN 5960601	1
	53114	Spindle, R 13/4" after SN 5960601	
	53116	Spindle, R	
36	25815	Steering Cylinder prior to SN 2150180	1
	81212	Steering Cylinder after SN 2150180	
37	15500	Tank, Fuel	1
38	53053	Tie Rod prior to SN 5960601	2
	53054	Tie Rod after SN 5960601	
39	53042	Tie Rod End prior to SN 5960601	2
	53043	Tie Rod End after SN 5960601	
40	24008	Washers	2

Copyright © 2006 Terramite Corporation

Courtesy of Machine.Market

Exploded View of Dash

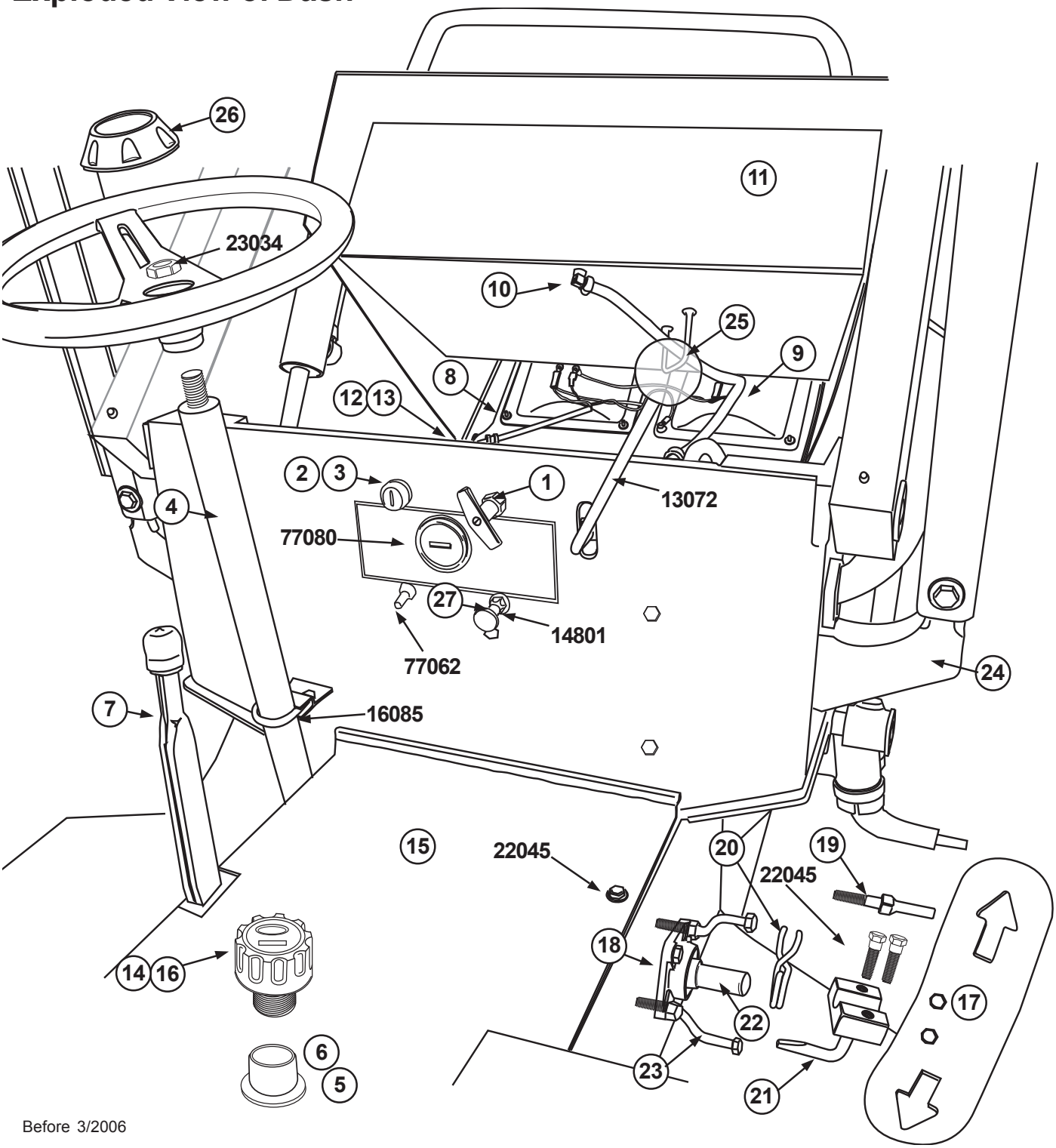

Before 3/2006

	ENGINE	PART NUMBER	DESCRIPTION	QTY.
11	Kohler	15123	Hood Assembly with Decals	1
	Honda	15128	Hood Assembly with Decals	
	Perkins	15124	Hood Assembly with Decals	
	Kubota	15125	Hood Assembly with Decals	

Copyright © 2006 Terramite Corporation

Courtesy of Machine.Market

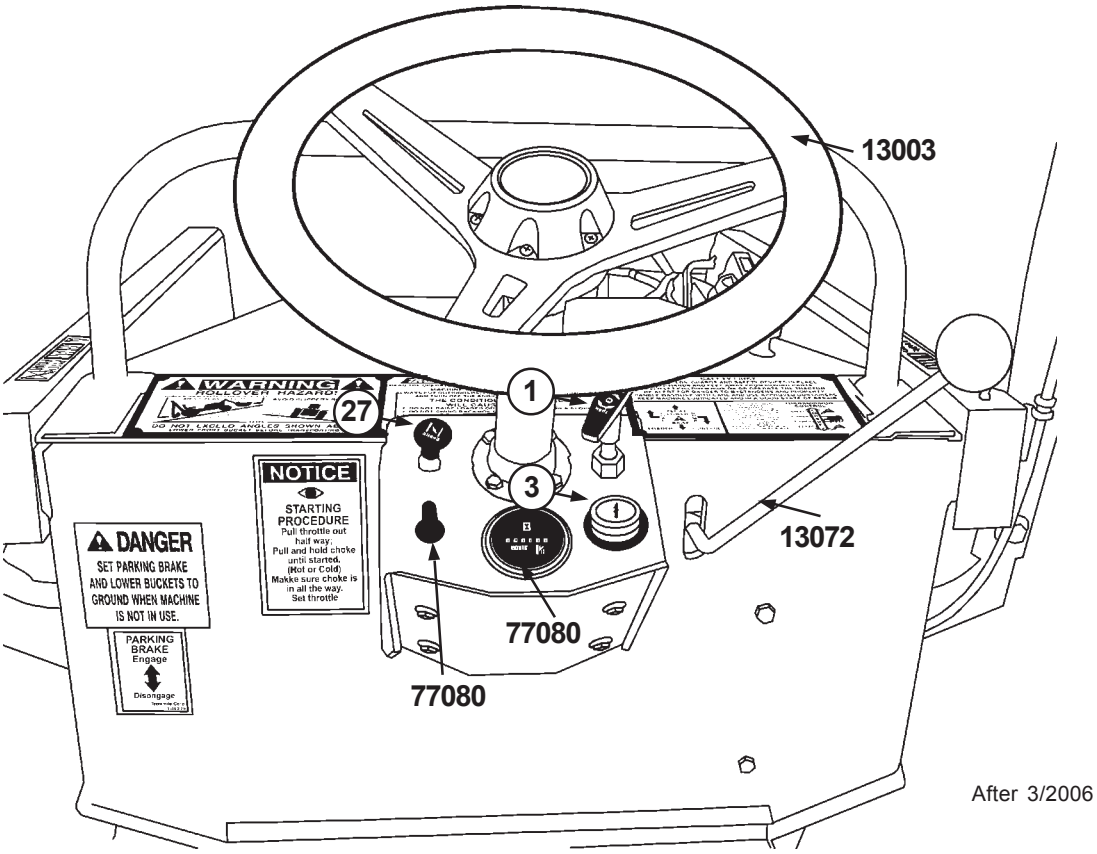

ITEM	PART NUMBER	DESCRIPTION	QTY.
1	13142	Throttle Cable	1
2	77033	Ignition Switch w/Key (3 Prong) Before 5-98 Processing Requires Serial Number	1
3	70036	Ignition Switch w/Key (6 Prong) After 5-98 Processing Requires Serial Number	
4	15100	Steering Gear, Power	1
5	21002	Filter, Hydraulic (Not Shown)	1
6	15900	Tank, Hydraulic, T5 (Not Shown)	1
7	56002	Brake Lever, Adjustable	1
8	28751	Nut, Headlamp	8
9	77072	Headlamp assembly	2
10	15501	Fitting, Fuel Tank, 1/8 MP x 1/4" HB 90o (specify engine model)	1
11	72015	See Wiring Harness & order by engine type	1
12	28208	Bolt, 1/2" x 1 1/4"	2
13	15032	Hood, Hinge, Bushing, T5c/T7/T9 (Not Shown)	2
14	22204	Cap, Hyd. Breather Filter w/Dipstick	1
15	15700	Deck Center	1
16	10160	T5 and T5B Old Style Dipstick (Not Shown)	1
17	11600	Foot Pedal	1
18	11627	Pillow Block Bearing	1
19	11629	Spring Centering Bolt	1
20	13029	Pedal Spring	1
21	11610	Pedal Block	1
22	11620	Pedal Shaft	1
23	22184	Pedal Stop Bolt	1
24	Factory Insalled 15425	4 POINT ROPS mount - Weld on type (standard Equipment After 1-1-97) Bolt on Reto Fit 4 POINT ROPS Kit (Requires Drilling)	
25	13942	Wobblestick Knob	1
26	13136	Cap Steering Wheel	1
27	14801	Choke Cable	1

Copyright © 2006 Terramite Corporation

Courtesy of Machine.Market

Under the Hood - Kohler Command Engine

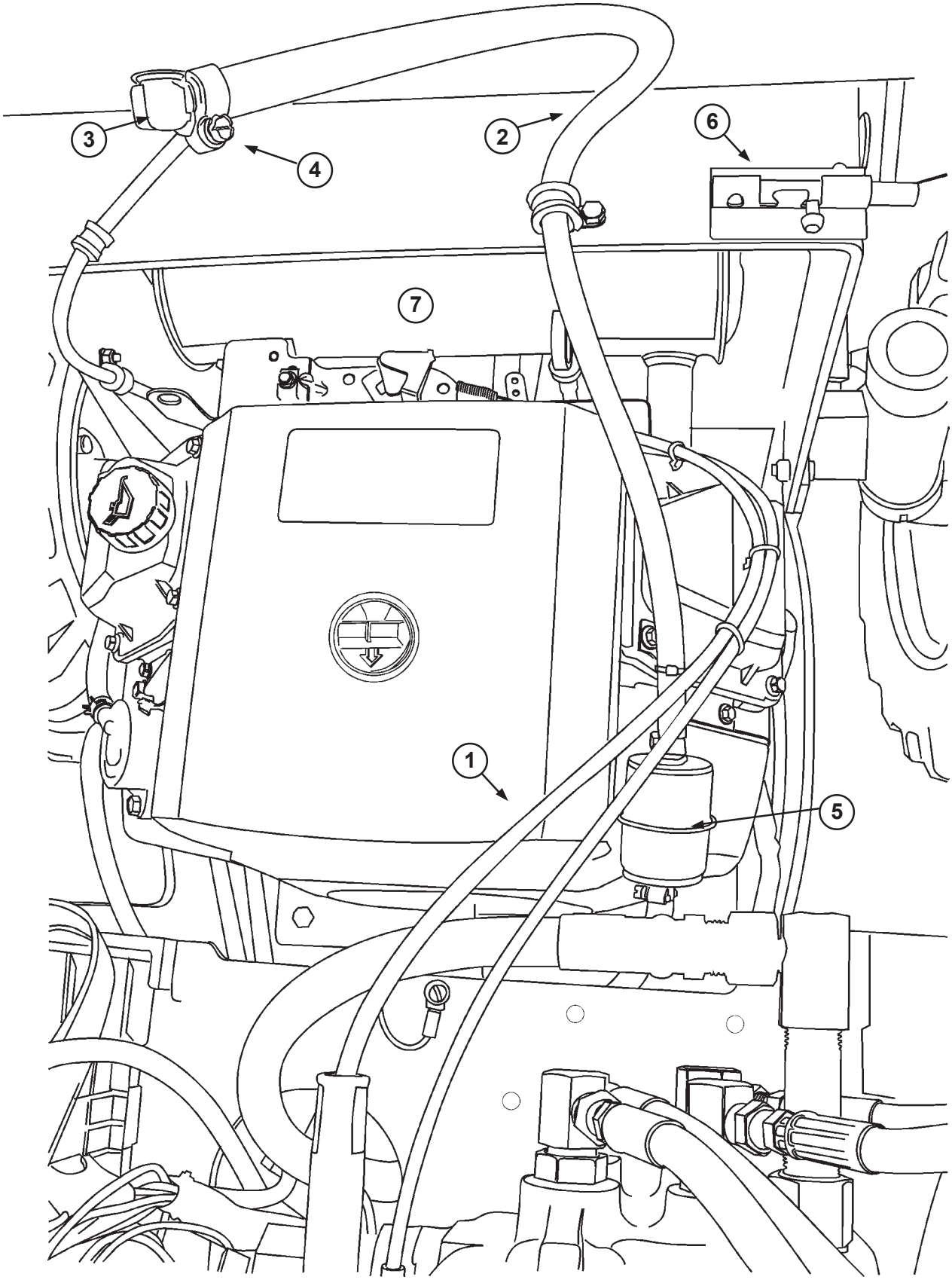

Copyright © 2006 Terramite Corporation

Courtesy of Machine.Market

ITEM	PART NUMBER	DESCRIPTION	QTY.
1	13142	Throttle Cable	1
2	84000 80033	1/4" Fuel Hose (Sold by the Foot) 5/16" Fuel Hose (Sold by the Foot)	3
3	15501	Fitting, Fuel Tank, 1/8 MP x 1/4" HB 90o (specify engine model)	1
4	15502	Clamp, Fuel Hose	5
5	15503 15506	1/4" Fuel Filter 5/16" Fuel Filter	1
6	22027	Hood Prop Bolt	1
7	42023	20HP Kohler Engine Muffler	1

View of Drive Shaft Coupler

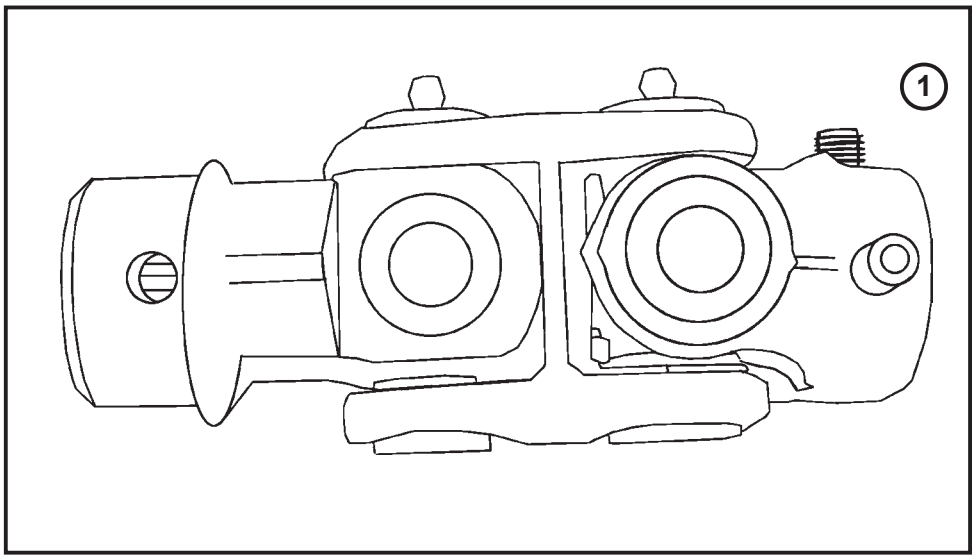

ITEM	PART NUMBER	DESCRIPTION	QTY.
1	60033	Drive Shaft Coupler used after 1-91 Key Wayed	1
NOT SHOWN	61622 60001	UCC Sleeve Coupling used prior to 1-91 4WD (Set Screw on Engine end only)	1 1
2	60040	Drive Shaft Splined L3 Tooth after 2450222	1
3	60035	Drive Shaft Assy, Slined, T5C\7\9 2WD	1

Copyright © 2006 Terramite Corporation

Courtesy of Machine.Market

View from Behind Center Steer

After April 2006

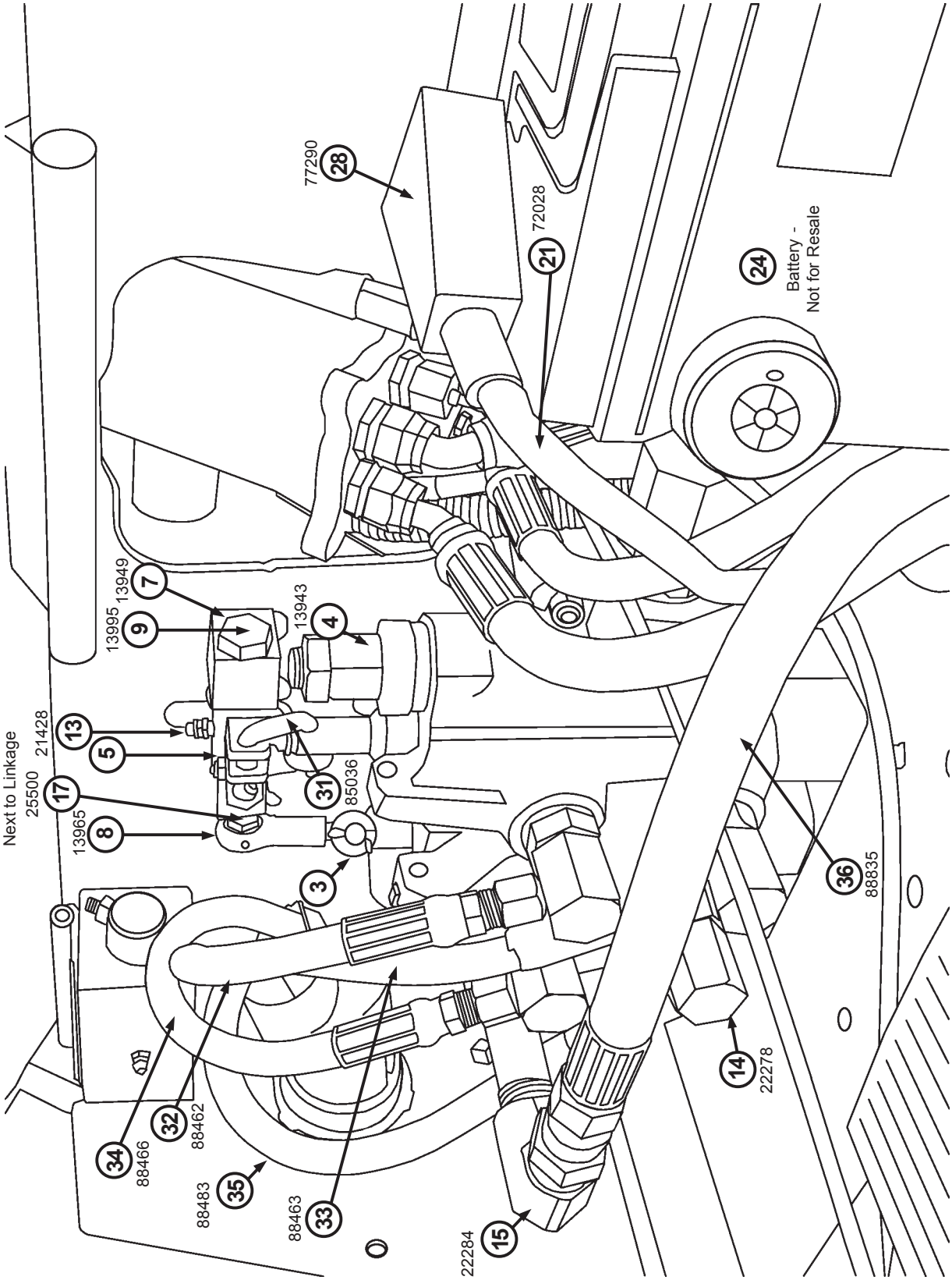

Copyright © 2006 Terramite Corporation

Courtesy of Machine.Market

ITEM	PART NUMBER	DESCRIPTION	QTY.
3	13413	Cotter Pin	7
4	13943	Relief Valve, Loader	1
5	13944	Wobblestick Pivot Block, Front	1
7	13949	Wobblestick Hinge Bolt Support	1
8	13965	Linkage	3
9	13995	Wobblestick Hinge Bolt	1
13	21428	Fitting, Grease	32 Per Machine
14	22278	Fitting, 1/2" x 90°, Loader Valve	1
15	22784	Fitting, 1/2" x 1/4" x 90°, Loader Valve	4
17	25500	Nut, 5/16" NF Jam	3
21	72038	48" Cable, Battery to Solenoid	1
24	77022	Battery (not for resale for shipments)	1
28	77290	Insulator, Red	1
31	85036	Kit, Linkage Valve	1
32	88462	Hose, 1/4" x 62", Loader Valve	1
33	88463	Hose, 1/4" x 63", Loader Valve	1
34	88466	Hose, 1/4" x 66", Loader Valve	1
35	88483	Hose, 1/4" x 83", Loader Valve	1
36	88835	Hose, 1/2" x 35", Loader Valve	1

All Hoses Must Be 5000 psi rated, 20,000 Burst 2 Wire Braid Rubber Covered.

1/2 FX08 1/2 ID E-Z Flex 250 MSHA IC - 123/10 Exceeds SAE 3500psi MAX

3/8 FX06 3/8 ID E-Z Flex 250 MSHA IC - 123/10 Exceeds SAE 4000psi MAX

1/4 FX04 1/4 ID E-Z Flex 250 MSHA 2G-IC-20C/1 Exceeds SAE 5000psi MAX

Copyright © 2006 Terramite Corporation

Courtesy of Machine.Market

View from Behind Dash

Before April 2006

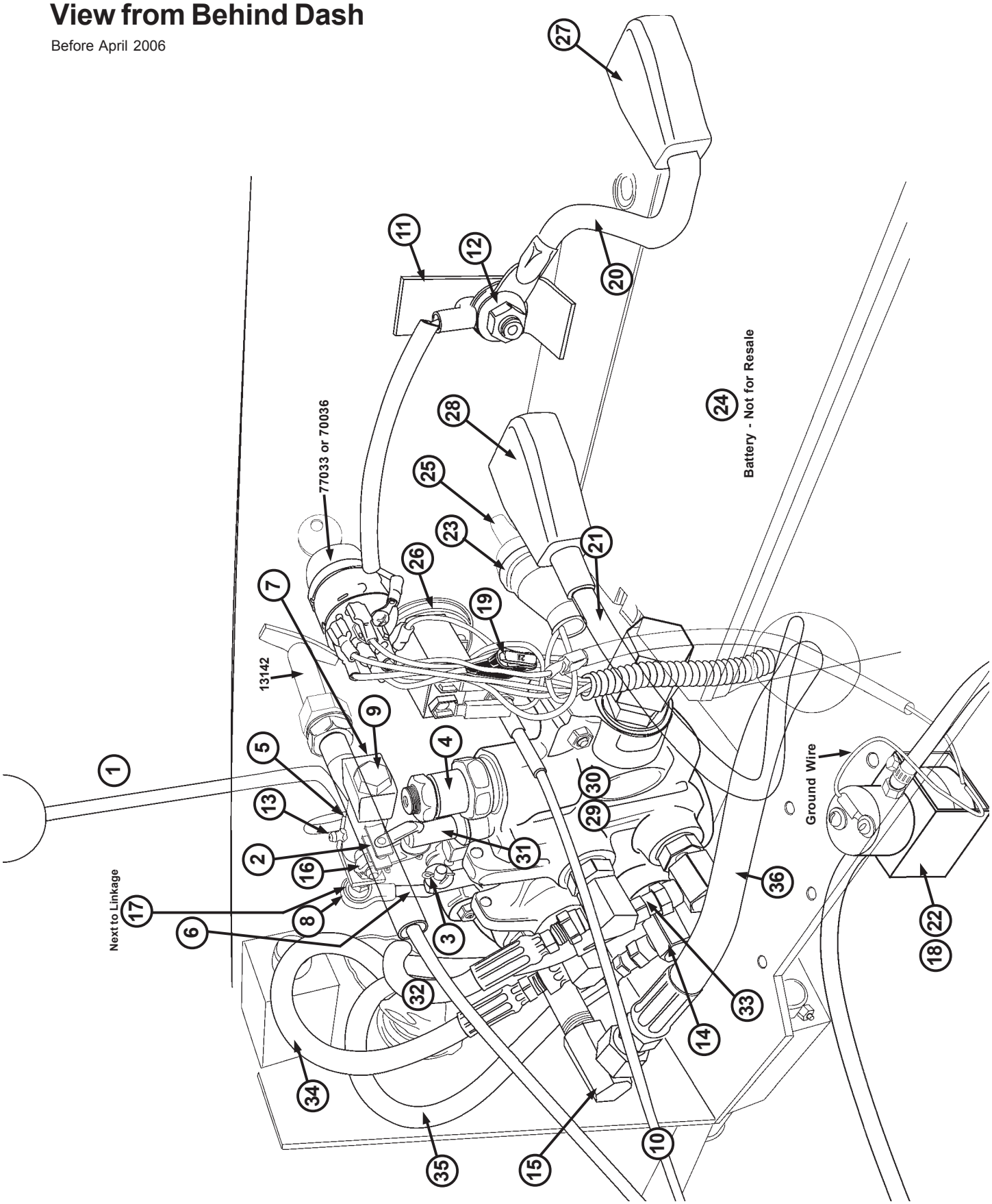

Copyright © 2006 Terramite Corporation

Courtesy of Machine.Market

ITEM	PART NUMBER	DESCRIPTION	QTY.
1	13072	Handle, Loader Wobblestick	1
2	13411	Valve Link	3
3	13413	Cotter Pin	7
4	13943	Relief Valve, Loader	1
5	13944	Wobblestick Pivot Block, Front	1
6	13947	“L” Link	1
7	13949	Wobblestick Hinge Bolt Support	1
8	13965	Linkage	3
9	13995	Wobblestick Hinge Bolt	1
10	14801	Choke Cable	1
11	15417	Bracket, Battery	1
12	20082	Nut, 3/8" NC Flange Z	1
13	21428	Fitting, Grease	32 Per Machine
14	22278	Fitting, 1/2" x 90°, Loader Valve	1
15	22784	Fitting, 1/2" x 1/4" x 90°, Loader Valve	4
16	23008	Nut, 3/8" - 24" NF Lock	1
17	25500	Nut, 5/16" NF Jam	3
18	40014	ASCO Fuel Shutoff Valve Assembly	1
19	70033	Holder, Fuse, 20 AMP, ATO	1
20	72028	7" Cable, Battery to Ground	1
21	72038	48" Cable, Battery to Solenoid	1
22	72076	ASCO Fuel Shutoff Valve	1
23	73695	Toggle Switch Back Boot Cover	1
24	77022	Battery (not for resale for shipments)	1
25	77062	Single Pole Toggle Switch	1
26	77080	Hourmeter (view from back)	1
27	77280	Insulator, Black	1
28	77290	Insulator, Red	1
29	84070	Valve, Loader(With Fittings)	1
30	85015	Valve, Loader	1
31	85036	Kit, Linkage Valve	1
32	88462	Hose, 1/4" x 62", Loader Valve	1
33	88463	Hose, 1/4" x 63", Loader Valve	1
34	88466	Hose, 1/4" x 66", Loader Valve	1
35	88483	Hose, 1/4" x 83", Loader Valve	1
36	88835	Hose, 1/2" x 35", Loader Valve	1

All Hoses Must Be 5000 psi rated, 20,000 Burst 2 Wire Braid Rubber Covered.

1/2 FX08 1/2 ID E-Z Flex 250 MSHA IC - 123/10 Exceeds SAE 3500psi MAX

3/8 FX06 3/8 ID E-Z Flex 250 MSHA IC - 123/10 Exceeds SAE 4000psi MAX

1/4 FX04 1/4 ID E-Z Flex 250 MSHA 2G-IC-20C/1 Exceeds SAE 5000psi MAX

Copyright © 2006 Terramite Corporation

Courtesy of Machine.Market

Front Wheel Hubs

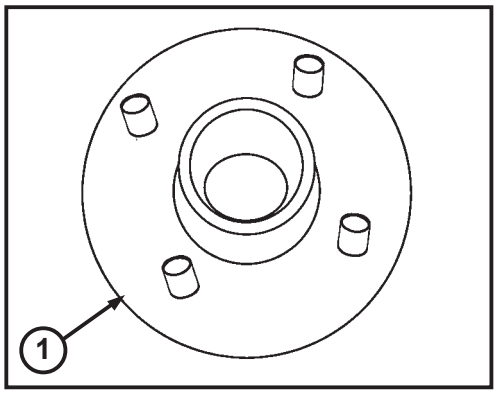

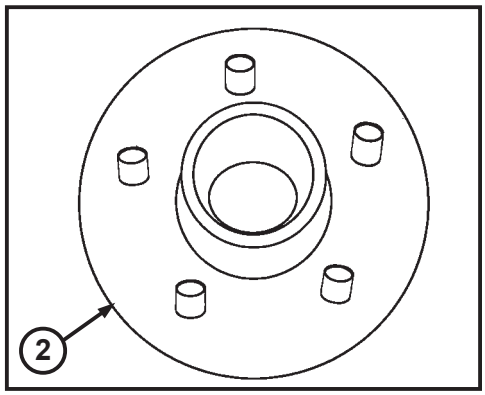

ITEM	PART NUMBER	DESCRIPTION	QTY.
1	53130	Hub, previous to 6-1-96	2
2	53137	Hub, 5 on 4 after 6-1-96	2

Hub Assembly and Spindle

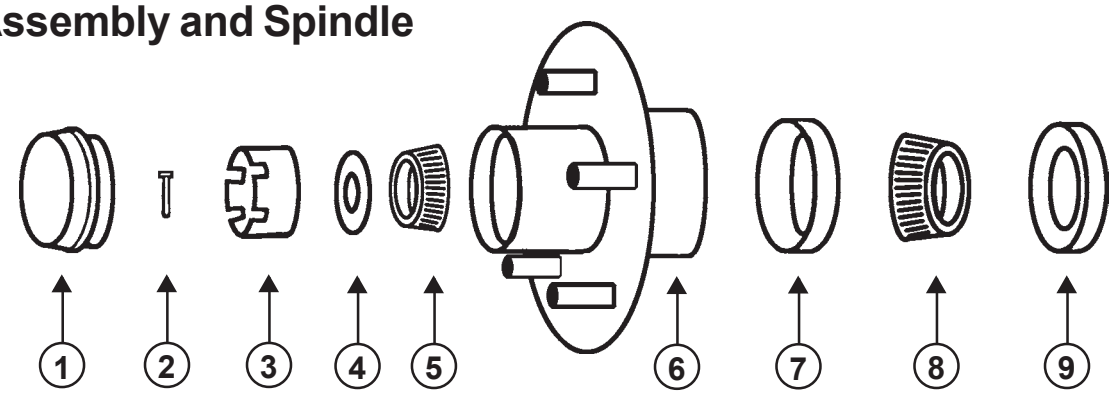

NOTE: THESE PART NUMBERS USED ON MACHINES BUILT AFTER 6-96. WHEN ORDERING, SUPPLY SERIAL NUMBER OF YOUR MACHINE.

ITEM	PART NUMBER	DESCRIPTION	QTY.
1	53170	Dust Cap	1
2	53160	Cotter Pin	1
3	53150	Nut	1
4	53057	Bearing, Outer Before 6-96	1
	53125	Bearing, Outer After 6-96	
5	53140	Washer	1
6	53137	Hub, 5 on 4 after 6-1-96	1
7	53058	Race, Outer & Inner Before 6-96	1
	53124	Race, Inner After 6-96	
8	53057	Bearing, Inner Before 6-96	1
	53123	Bearing, Inner After 6-96	
9	53055	Seal Before 6-96	1
	53111	Seal After 6-96	

Copyright © 2006 Terramite Corporation

Courtesy of Machine.Market

Left Front Tire and Rim (Prior to 3-03)

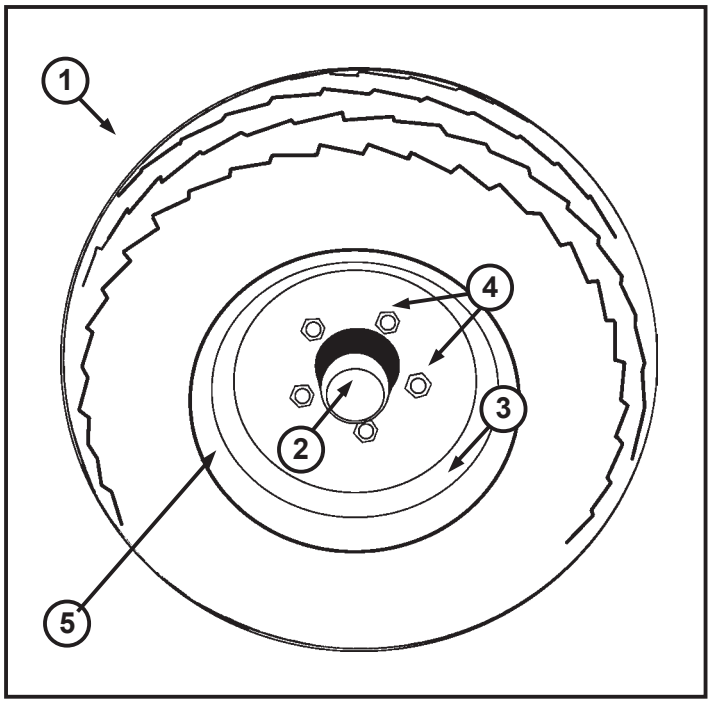

Left Rear Tire and Rim

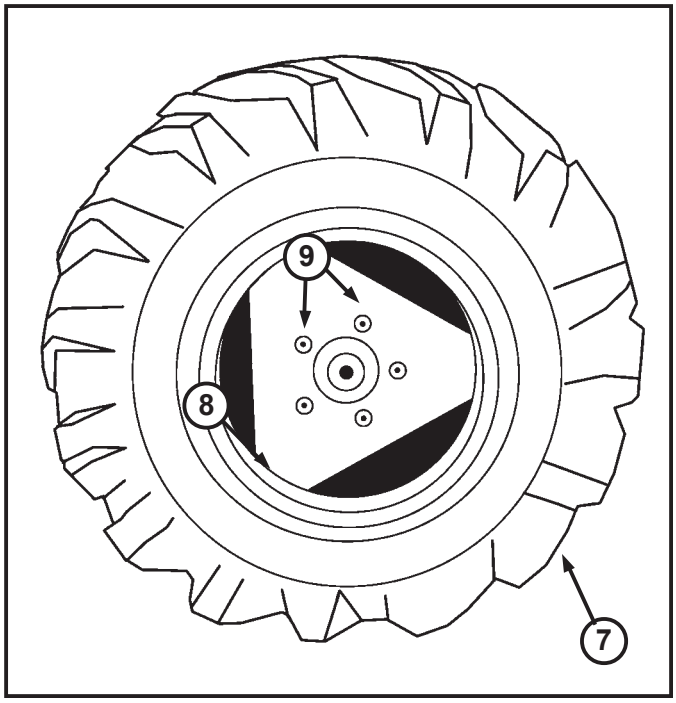

ITEM	PART NUMBER	DESCRIPTION		QTY.
1	51272	Tire, 20.5 x 8 x 10		2
2	53170	Dust Cap		2
3	51273	Tire Valve		2
4	28505	Nut, 3/8" NF Lug		10
5	51292	Rim, Front	4 Lug prior to SN 5960601	2
	52871		5 Lug after SN 5960601 (painted)	
6	51005	Front Tube (not shown)		2
	51172	Std. Rear Tire		
7	51721	Std. Rear Tire	Mounted on 9.5"x16" Rim (1-18.2) used prior to 11-95	2
	51722	Std. Rear Tire	Mounted on 9.5"x16" Rim (1-18.4) used after 11-95	
8	51182	Rim	prior to 11/1/95	2
	51184		after 2003	
9	28506	Nut, Lug		10
10	51000	Rear Tube (not shown)		2

Copyright © 2006 Terramite Corporation
Courtesy of Machine.Market

Top View of Parking Brake Assembly

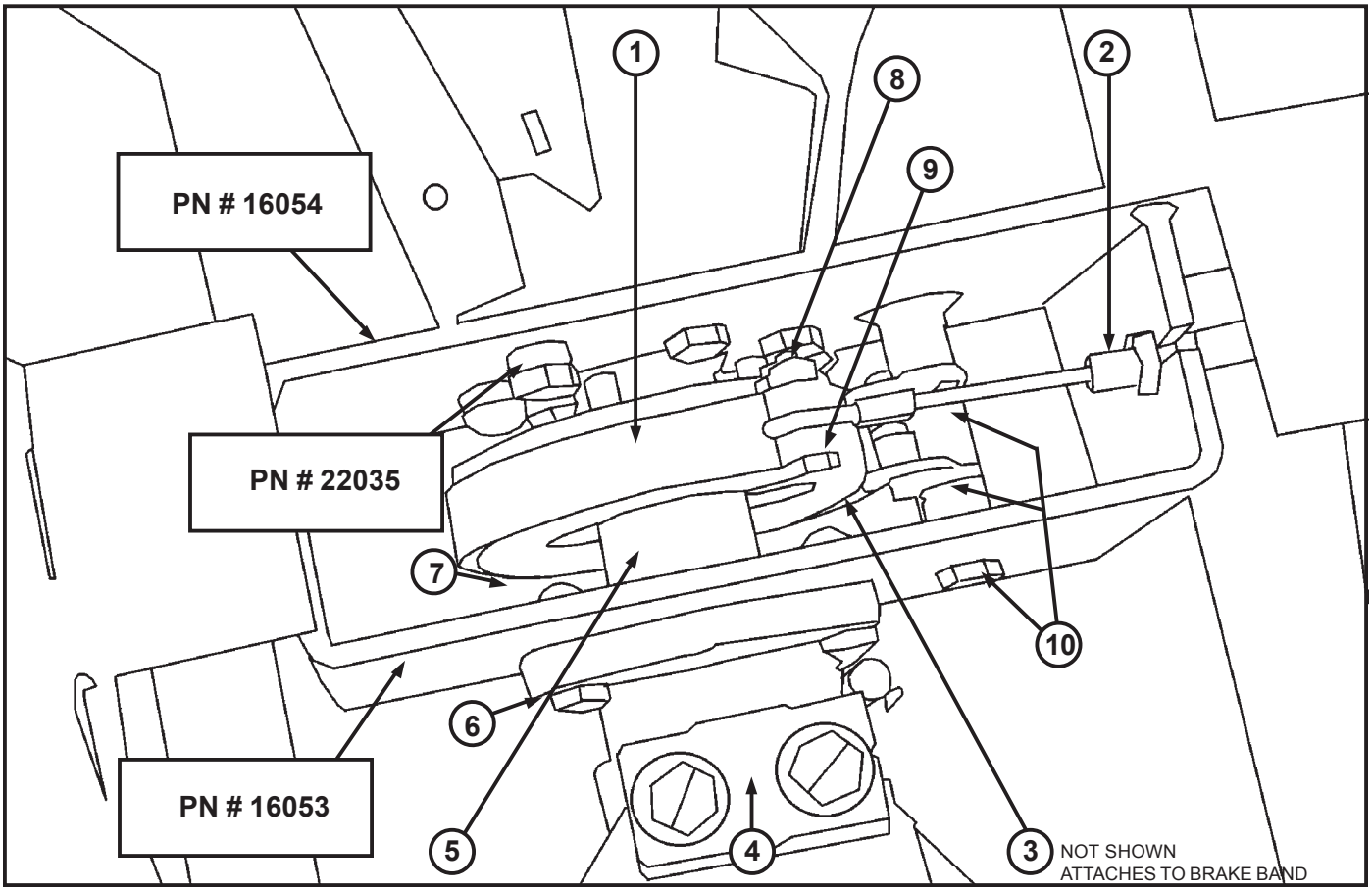

ITEM	PART NUMBER	DESCRIPTION	QTY.
1	55620	Brake Band	1
2	55606	Brake Cable	1
3	55613	Brake Off Set Link Not Shown - Attaches to Brake Band	1
4	64003	Drive Motor	1
5	51800	Drive Motor Flange	1
6	22034	Bolt	1
7	28500	Nut	1
8	23005	Nut	1
9	22038	Bolt	1
10	17028	Bushing, Brake 9/16" ID x 1" OD x 7/8" L	1
	17029	Bushing, Brake 9/16" ID x 1"OD x 1 1/4" L	1
	22042	Bolt, 14mm x 90 mm C2.0z Brake 38748	1

Copyright © 2006 Terramite Corporation

Courtesy of Machine.Market

Retro Fit Parking Brake Spring Assembly

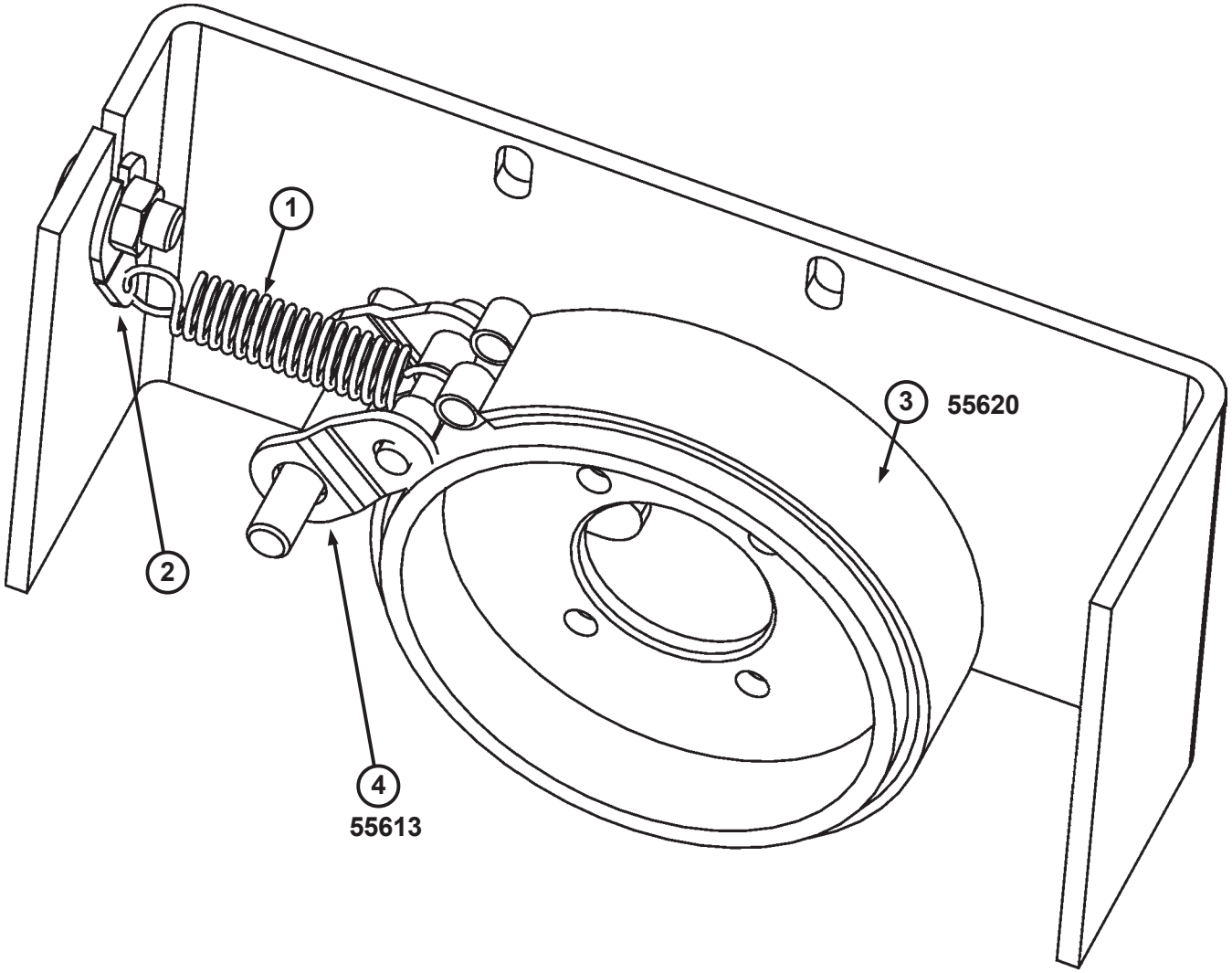

PART	NUMBER	DESCRIPTION	QTY.
1	13168	Spring, Retro Fit Parking Brake	1
2	55621	Spring Bracket, Parking Brake	1

Copyright © 2006 Terramite Corporation
Courtesy of Machine.Market

View from Front of Rear Axle - Parking Brake Assembly

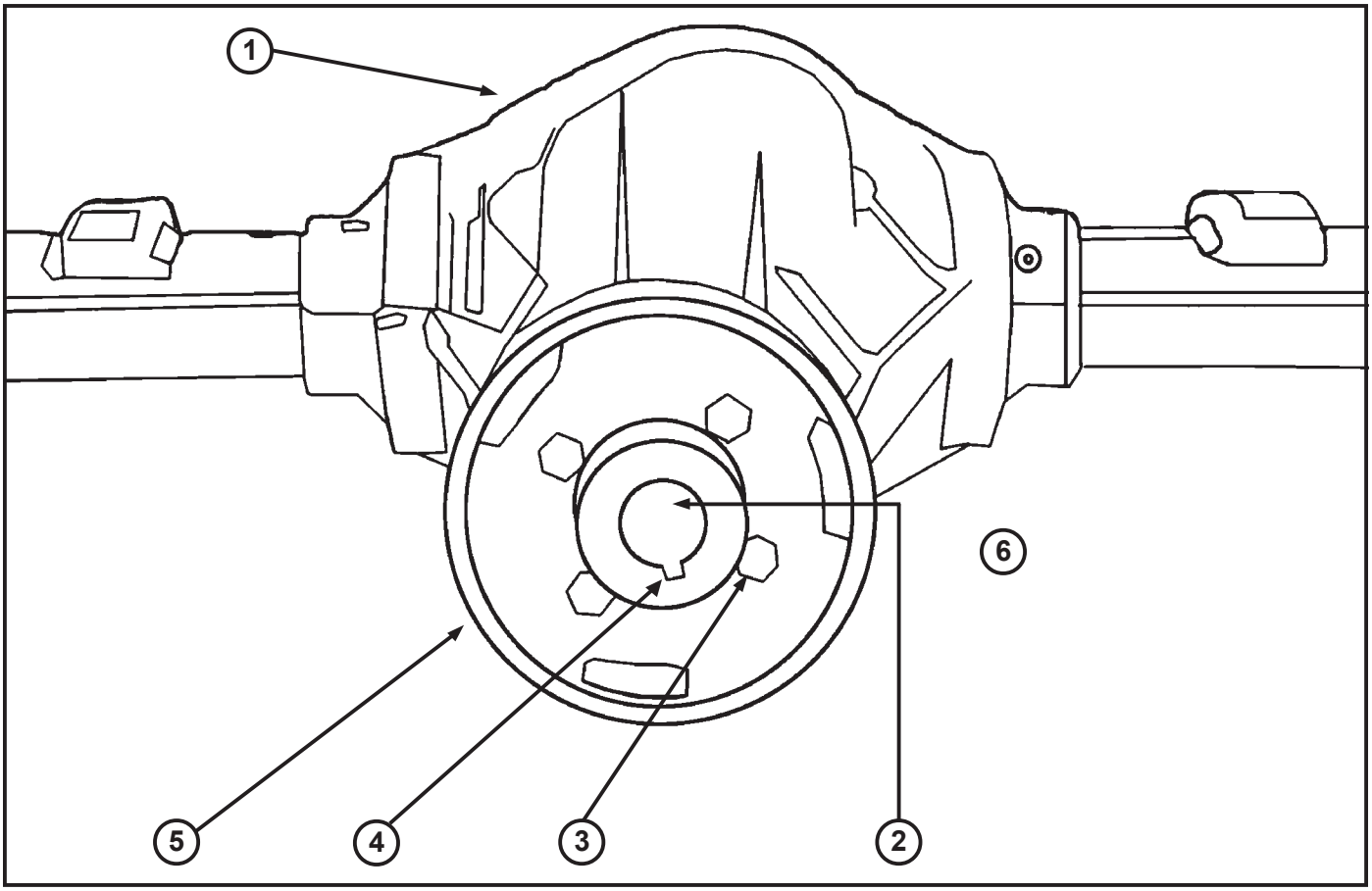

ITEM	PART NUMBER	DESCRIPTION	QTY.
1	55002	Rear Axle prior to 10-1-95	1
	55004	Rear Axle after 10-1-95	
2	51800	Drive Motor Flange	1
3	26288	Bolt, 3/8" x 1 3/4" NF GR8	4
4	62021	Key 1/4" x 1/4" x 1 3/8"	1
5	57034	Brake Drum	1
6	23008	Nut	1

Copyright © 2006 Terramite Corporation

Courtesy of Machine.Market

Exploded View of Dipstick

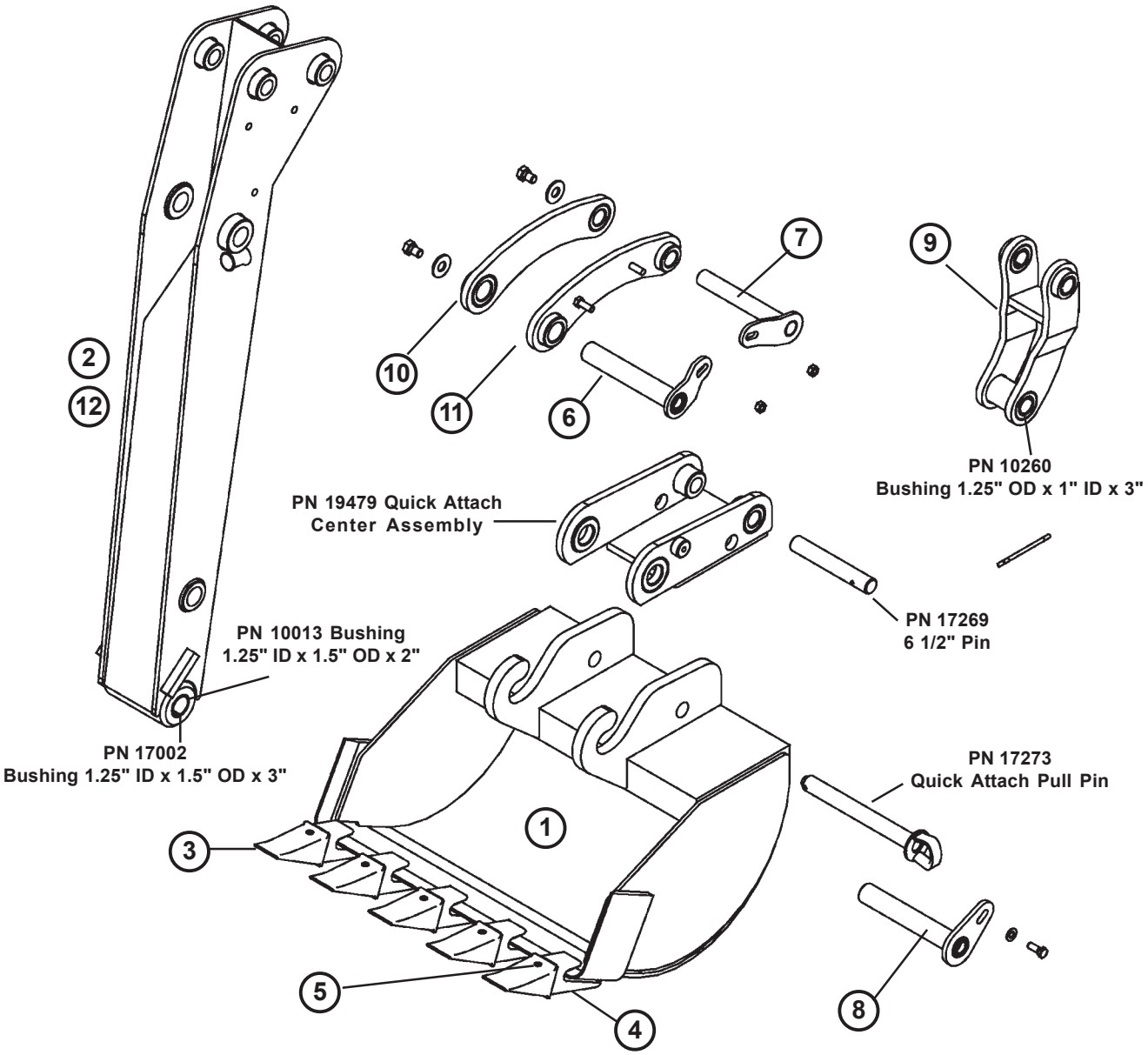

ITEM	PART NUMBER	DESCRIPTION	QTY.
1	10116	16” Bucket (Standard)	1
2	10268	Dipstick Assembly (resale)	1
3	10500	Tooth Cap after 1-90	NA
4	10510	Tooth Shank (Weld On)	NA
5	10530	Pin, Tooth after 1-90	NA
6	10812	Pin, 11/4" x 71/2"	1
7	17013	Pin, 1" x 73/8"	1
8	17190	Pin, 11/4" x 81/4"	1
9	18240	Linkage Assembly Center; T5C	1
10	18260	Linkage Link Assembly T5C Left Assembly	1
11	18261	Linkage Link Assembly T5C Right Assembly	
12	18270	Dipstick For Linkage Type Only	1

Copyright © 2006 Terramite Corporation

Courtesy of Machine.Market

Backhoe Assembly

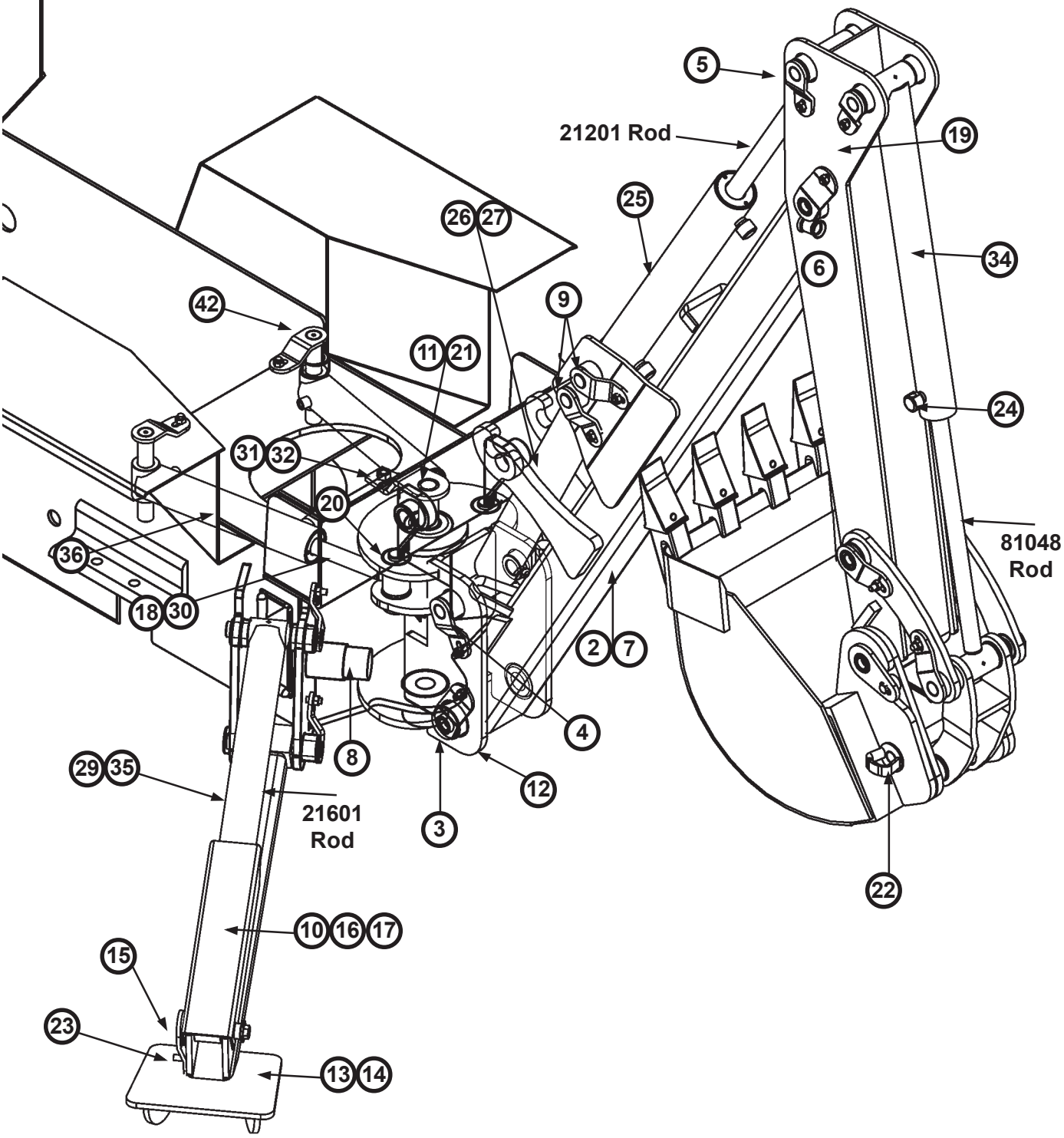

Copyright © 2006 Terramite Corporation

Courtesy of Machine.Market

ITEM	PART NUMBER	DESCRIPTION	QTY.
1	10013	Boom Bushings	2
2	10286	Boom Assembly (resale)	1
3	10400	Pin, 11/4" x 81/4"	2
4	10410	Pin, 1" x 73/4"	1
5	10700	Pin, 1" x 67/8"	2
6	10701	Pin, 11/4" x 71/4"	1
7	10900	Boom Assembly	1
8	11006	Swing Stop	2
9	11100	Pin, 1" x 61/4"	6
10	11123	Guard, Outrigger	2
11	11140	Pin, Main Swing	1
12	11300	Swing Assembly	1
13	11500	Outrigger Assembly 4 Lug Prior to 5-1-96	2
14	11501	Outrigger Assembly 5 Lug after 5-1-96	
15	11502	Pin, 1" x 41/8"	2
16	11510	Guard, Outrigger	2
17	11511	Outrigger Guard with pin	2
18	12019	Rod, Swing Cylinder Boss Only	
19	14022	Reflector, Red	3
20	15300	Pin, 1" x 41/8"	2
21	17002	Bushing	1
22	17273	Pin, 1" x 9"	1
23	20082	Nut, 3/8" NC Flange	24
24	20174	Fitting, 1/4"	26
25	21000	Crowd Cylinder	1
	21201	Rod, Crowd Cyl.	1
26	21200	Boom Cylinder	1
27	21201	Rod, Boom Cylinder	1
28	21420	Cotter Pin	2
29	21600	Outrigger Cylinder Before 3-3-99	2
30	25201	Rod, Swing Cylinder	1
31	28500	Nut, 1/2" NC Lock	1
32	28950	Washer	1
33	80045	Hose, 1/4" Swing Crossover, 15"	2
34	81060	Rear Curl Cylinder For Linkage Type T5C/T7	1
	81048	Rod\Rear Cur Link	1
35	81139	Outrigger Cylinder After 3-3-99	
36	82070	Cylinder Assembly, Swing W/Tee Fitting	2
37	84131	Hose, 1/4" x 131" (Not pictured)	1
38	88420	Hose, 1/4" Swing to Valve, 20" (Not pictured)	1
39	88425	Hose, 1/4" Swing to Valve, 25" (Not pictured)	1
40	88466	Hose, 1/4" x 66" (Not pictured)	3
41	88492	Hose, 1/4" x 92", crowd cylinder (Not pictured)	1
42	17020	Pin 6 5/8" Swing Cylinder To Frame	2

Copyright © 2006 Terramite Corporation

Courtesy of Machine.Market

Rear Axle Assembly

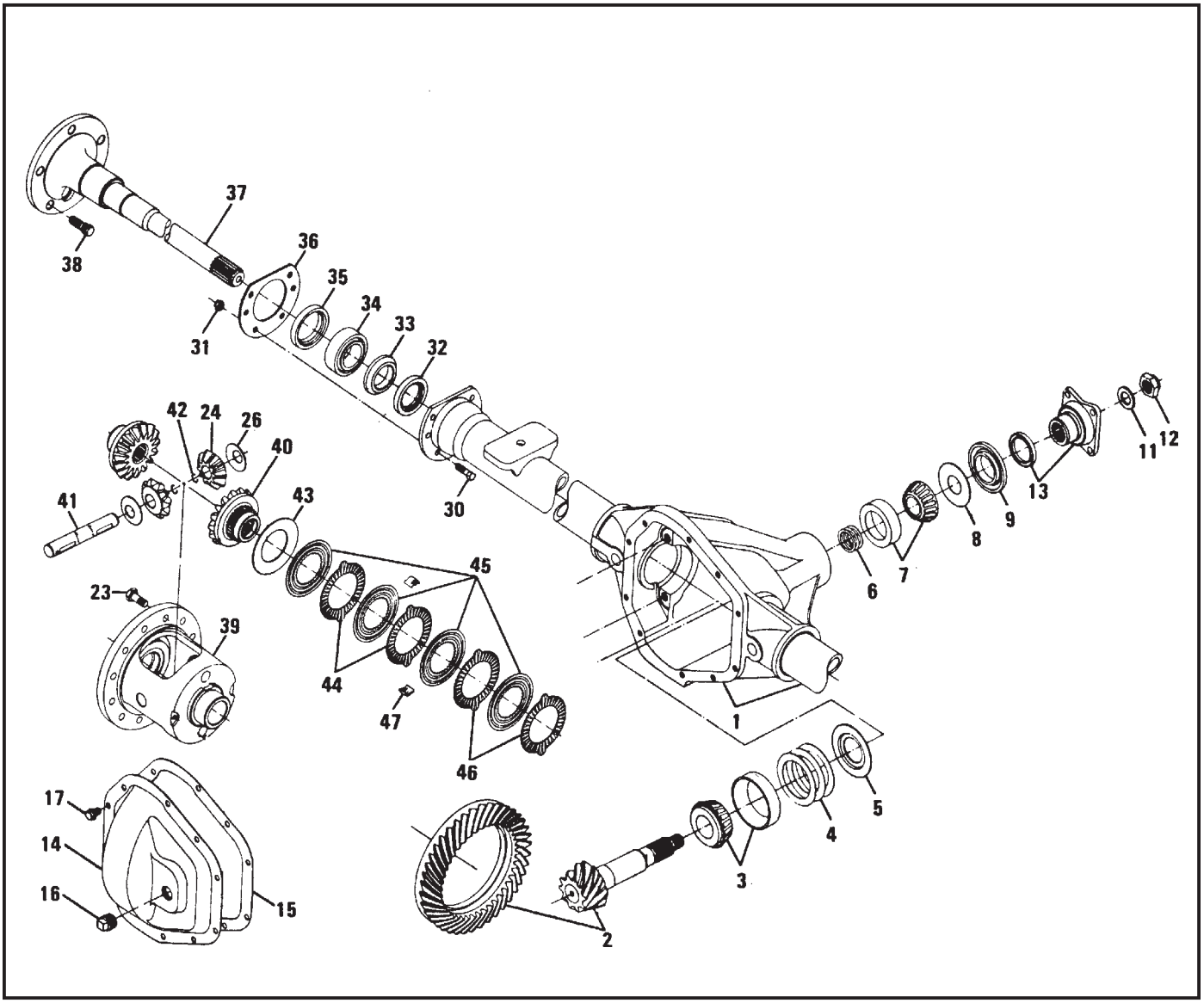

ITEM	PART NUMBER	DESCRIPTION	DANA PART NO.	QTY.
1	55010	Housing-Axle	*	1
2	64004	Gear & Pinion Ass'y-Drive	*	1
3	55030	Kit-Inner Pinion Bearing	706031X	1
4	55040	Shim-Drive Pinion Adjusting	*	1
5	55050	Baffle-Pinion Bearing	*	1
6	55060	Shim-Pinion Bearing Adjusting	*	1
7	55022	Kit-Outer Pinion Bearing	706030X	1
8	55080	Slinger-Pinion Bearing Outer	*	1
9	55090	Seal-Pinion	35723	1
10	55100	End Yoke Assembly	3-4-5761X	1

Continued On Next Page

Copyright © 2006 Terramite Corporation

Courtesy of Machine.Market

Rear Axle Assembly (Continued)

ITEM	PART NUMBER	PREVIOUS PART NUMBER	DESCRIPTION	DANA PART NO.	QTY.
11	55110	5-11	Washer-Pinion Nut	30186	1
12	55120	5-12	Nut-Pinion	30185	1
13	55130	5-13	Companion Flange Assembly	2-1-1881X	1
14	55140	5-14	Cover-Carrier	*	1
15	55150	5-15	Gasket-Carrier Cover	34685	1
16	55160	5-16	Plug-Cover	36472	1
17	55170	5-17	Bolt-Carrier Cover	34279	
18	55180	5-18	Cap-Differential Bearing	**	1
19	55190	5-19	Bolt-Differential Bearing Cap	500400-20	2
20	55200	5-20	Kit-Differential Bearing	706032X	1
21	55210	5-21	Shim-Differential Bearing	*	1
22	55220	5-22	Case-Differential	*	1
23	55230	5-23	Bolt-Drive Gear	30187	
24	55240	5-24	Pinion-Differential	*	2
25	55250	5-25	Gear-Differential	*	2
26	55260	5-26	Thrust Washer-Differential Pinion	*	2
27	55270	5-27	Thrust Washer-Differential Gear	*	2
28	55280	5-28	Shaft-Differential	*	1
29	55290	5-29	Lock-Differential Shaft	13449	1
30	55300	5-30	Bolt-Break Mounting	34616-1	6
31	55310	5-31	Nut-Brake Mounting	35704	6
32	55320	5-32	Seal-Shaft Inboard	34419	2
33	55330	5-33	Ring-Wheel Bearing Retaining	32755	2
34	55340	5-34	Bearing Assembly	565903	2
35	55350	5-35	Seal-Shaft Outboard	35239	2
36	55360	5-36	Retainer-Oil Seal	35490	2
37	55370	5-37	Shaft-Axle Flanged	*	2
38	55380	5-38	Bolt-Wheel	35491	10
LIMITED SLIP DIFFERENTIAL (TRAC-LOK) STD. ON SER #9975236 & UP					
39	55390	5-39	Case-Differential	*	1
40	55400	5-40	Gear-Differential	*	2
41	55410	5-41	Shaft-Differential	*	1
42	55420	5-42	Ring-Snap	*	2
43	55430	5-43	Spacer-Differential Gear (Dished)	*	
44	55440	5-44	Plate-Differential	*	
45	55450	5-45	Disc-Differential	*	
46	55460	5-46	Plate-Differential (Selective Thickness)	*	
47	55470	5-47	Clip-Differential Clutch Retainer	*	1

*SOLD IN KITS FORM ONLY FROM DANA

Copyright © 2006 Terramite Corporation

Courtesy of Machine.Market

Model T5C - Pin Schematic

ITEM	P/N	DESCRIPTION	SIZE	QTY	ITEM	P/N	DESCRIPTION	SIZE	QTY
1	13000	FRONT CURL - BOTH ENDS	1" X 5 1/4"	2	13	10812	DIP/LINKAGE	1" 1/4 X 7 5/8"	1
2	12600	ARM CYL/ARMS	1" X 5 1/4"	2	14	10701	BOOM/DIPPER	1" 1/4 X 7 1/4"	1
3	12300	ARM/FRAME	1" X 6 7/8"	2	15	11100	CRD BOOM CYL/BM O.R./FRAME	1" X 6 1/4"	6
4	13200	FRONT BUCKET/ARMS	1" X 4 3/4"	2	16	10410	BOOM CYL/SWING	1" X 7 3/4"	1
5	12301	ARM CYL/FRAME	1" X 7 7/8"	1	17	10400	DIP/BUCKET BOOM/SWING	1" 1/4 X 8 1/4"	1
6	17198	ARM CYL/FRAME	1" X 8 1/2"	1	18	11502	OUTRIGGERS	1" X 4 1/8"	2
7	17174	BOOM LOCK	1" 1/4 X 11"	1	19	17156	OUTRIGGER PAD PULL PIN	1" X 5 1/4"	2
8	10700	CROWD & R CURL CYL/DIPPER	1" X 6 7/8"	2	20	17020	SWING CYL/FRAME	1" X 6 5/8"	2
9	17031	LINKAGE CURL/CYL	1" X 7 3/8"	1	21	15300	SWING CYL/SWING	1" X 4 1/8"	2
10	17269	R C CYL/BUCKET Q.D. & BM LATCH	1" X 6 1/2"	1	22	11140	SWING T5C	1" 1/4 X 18"	1
11	17273	R BUCKET PULL T5C/T5D	1" X 9"	1	23	10700	CROWD & R CURL CYL/DIPPER	1" X 6 7/8"	2
12	17190	Q.A. BUCKET T5C	1" 1/4 X 8 1/4"	1	24	17171	"Flip-Over Pad,Assembly"	1" X 7 1/8"	2

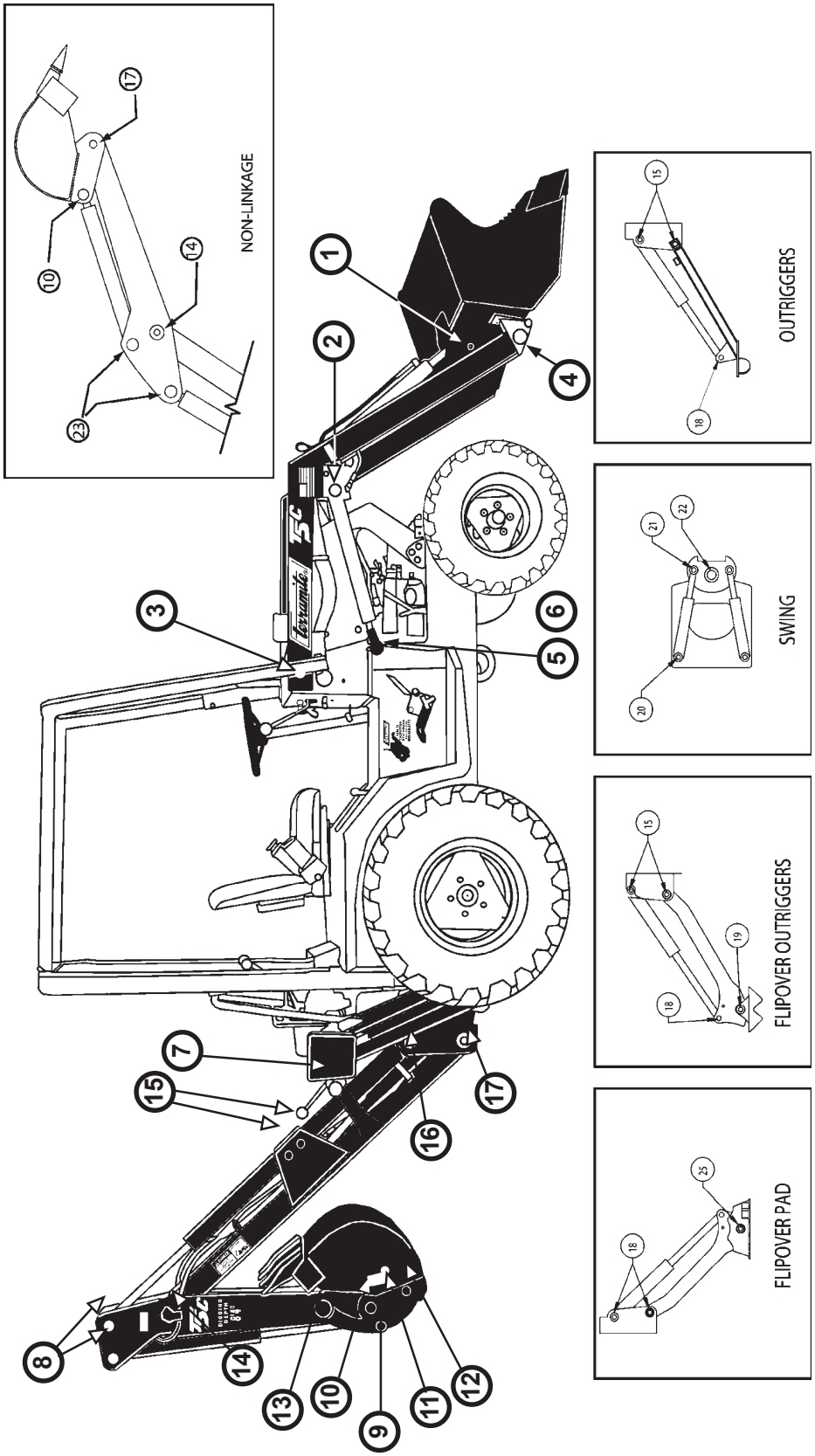

Copyright © 2006 Terramite Corporation
Courtesy of Machine.Market

General Tightening Torque for Bolts, Nuts and Taperlock Studs

The following charts give the standard torque values for bolts, nuts and taperlock studs for SAE Grade 5 or better quality.

Use these torques for bolts and nuts with standard threads (conversions are approximate).

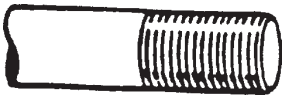

standard thread

Thread Size	Standard Torque	
Inches	Lb. Ft.	N·m*
1/4	9 ± 3	12 ± 4
5/16	18 ± 5	25 ± 7
3/8	32 ± 5	45 ± 7
7/16	50 ± 10	70 ± 15
1/2	75 ± 10	100 ± 15
9/16	110 ± 15	150 ± 20
5/8	150 ± 20	200 ± 25
3/4	265 ± 35	360 ± 50
7/8	420 ± 60	570 ± 80
1	640 ± 80	875 ± 100
1-1/8	800 ± 100	1100 ± 150
1-1/4	1000 ± 120	1350 ± 175
1-3/8	1200 ± 150	1600 ± 200
1-1/2	1500 ± 200	2000 ± 275

*1 newton meter (N·m) is approximately the same as 0.1 mkg.

Metric Fasteners

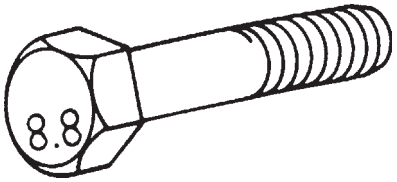

[Usually, material strength identification on bolt head is with number (i.e., 8.8, 10.9, etc.)]

The chart on the right gives the torque for bolts and nuts with Grade 8.8.

NOTICE: Caution must be taken to avoid mixing metric and standard (customary) fasteners. Mismatched or incorrect fasteners can result in vehicle damage or malfunction, or possible personal injury. Original fasteners removed from the vehicle should be saved for assembly when possible. If new ones are required, caution must be taken to replace with one that is of same part no. and grade or better.

Metric ISO Thread		
Thread Size	Torque	
(mm)	(N-m*)	(Lb. Ft.)
M6	12 ± 4	9 ± 3
M8	25 ± 7	18 ± 5
M10	55 ± 10	40 ± 7
M12	95 ± 15	70 ± 10
M14	150 ± 20	110 ± 15
M16	220 ± 30	160 ± 20
M18	325 ± 50	240 ± 35
M20	450 ± 70	330 ± 50
M22	600 ± 90	440 ± 65
M24	775 ± 100	570 ± 75
M27	1150 ± 150	840 ± 110
M30	1610 ± 200	1175 ± 150
M33	2000 ± 275	1450 ± 200
M36	2700 ± 400	2000 ± 300

ISO - International Standard Organization

*1 newton meter (N·m) is approximately the same as 0.1 mkg.

Copyright © 2006 Terramite Corporation

Courtesy of Machine.Market

All Safety Decals Must Be On The Machine And Clearly Legible!

Decal Location - Right Side from Operators Position

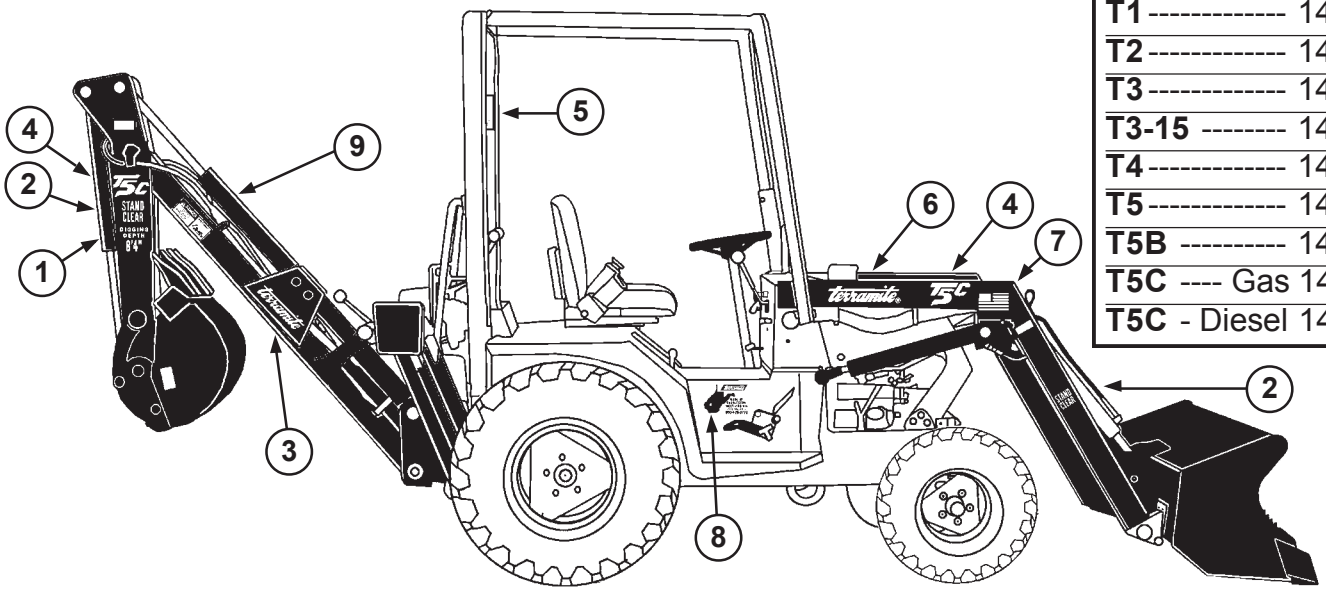

DECAL SETS

Less Serial Plate & Wobble Control

T1	14169
T2	14170
T3	14171
T3-15	14172
T4	14173
T5	14174
T5B	14175
T5C Gas	14176
T5C Diesel	14177

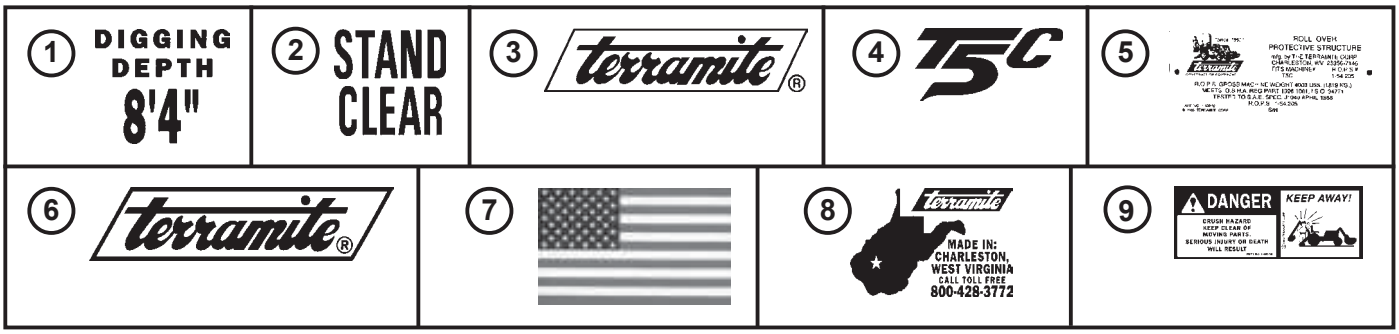

ITEM	PART NUMBER	DESCRIPTION	QTY.
1	14226	Decal, Digging Depth 8'4"	2
2	14004	⚠ Decal, Stand Clear	4
3	14055	Decal, Small Terramite	4
4	14057	Decal, T5C	4
5	14322	⚠ Decal, Plate ROPS T5&T6 Series	1
6	14001	Decal, Large Terramite	2
7	14099	Decal, American Flag	2
8	14070	Decal, West Virginia	2
9	14054	⚠ Decal, Danger, Crush Hazard	2

Copyright © 2006 Terramite Corporation

Courtesy of Machine.Market

All Safety Decals Must Be On The Machine And Clearly Legible!

Decal Location - Dash

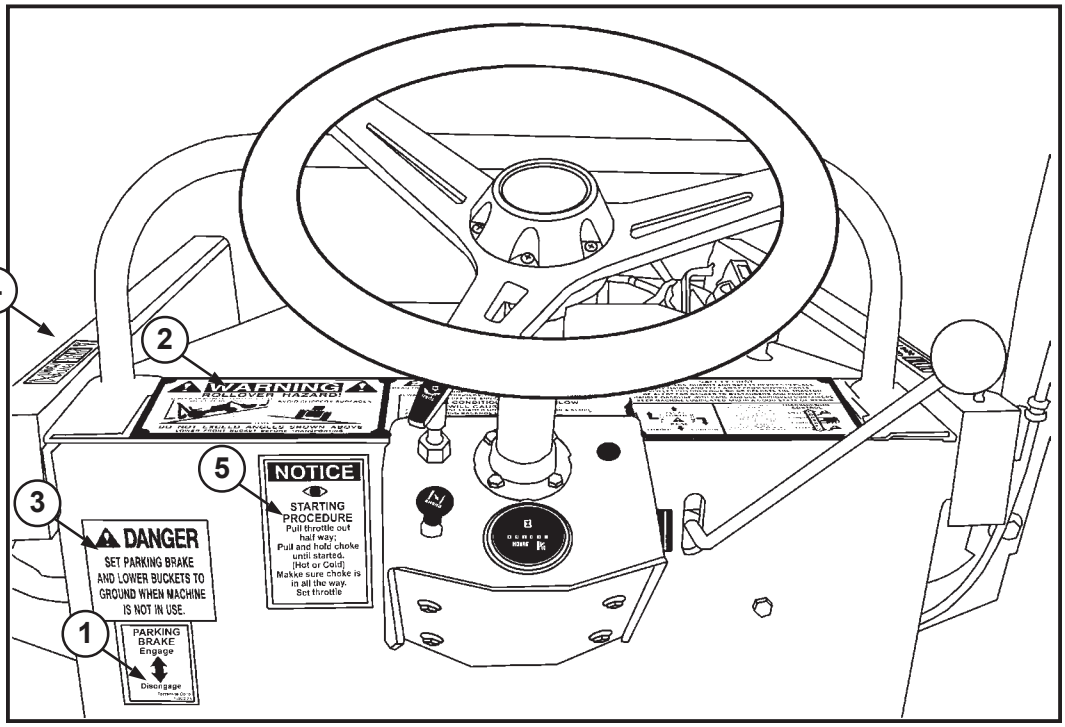

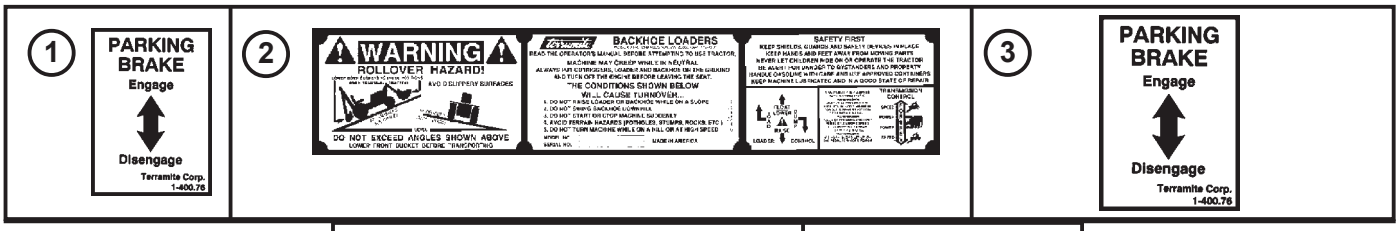

Diesel Only Decal Not Shown

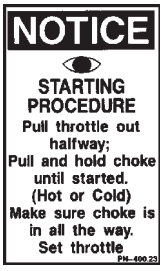

ITEM	PART NUMBER	DESCRIPTION	QTY.
1	14076	Decal, Parking Brake	1
2	14020	Decal Plate, Warning, Serial Number, etc.	1
3	14058	Decal, Instrument Panel	1
4	14051	Decal, Gas Only	1
	14071	Decal, Diesel Only	
5	14023	Decal, Notice Starting Procedure	1

Copyright © 2006 Terramite Corporation
Courtesy of Machine.Market

Decal Location - Rear of Operators Position

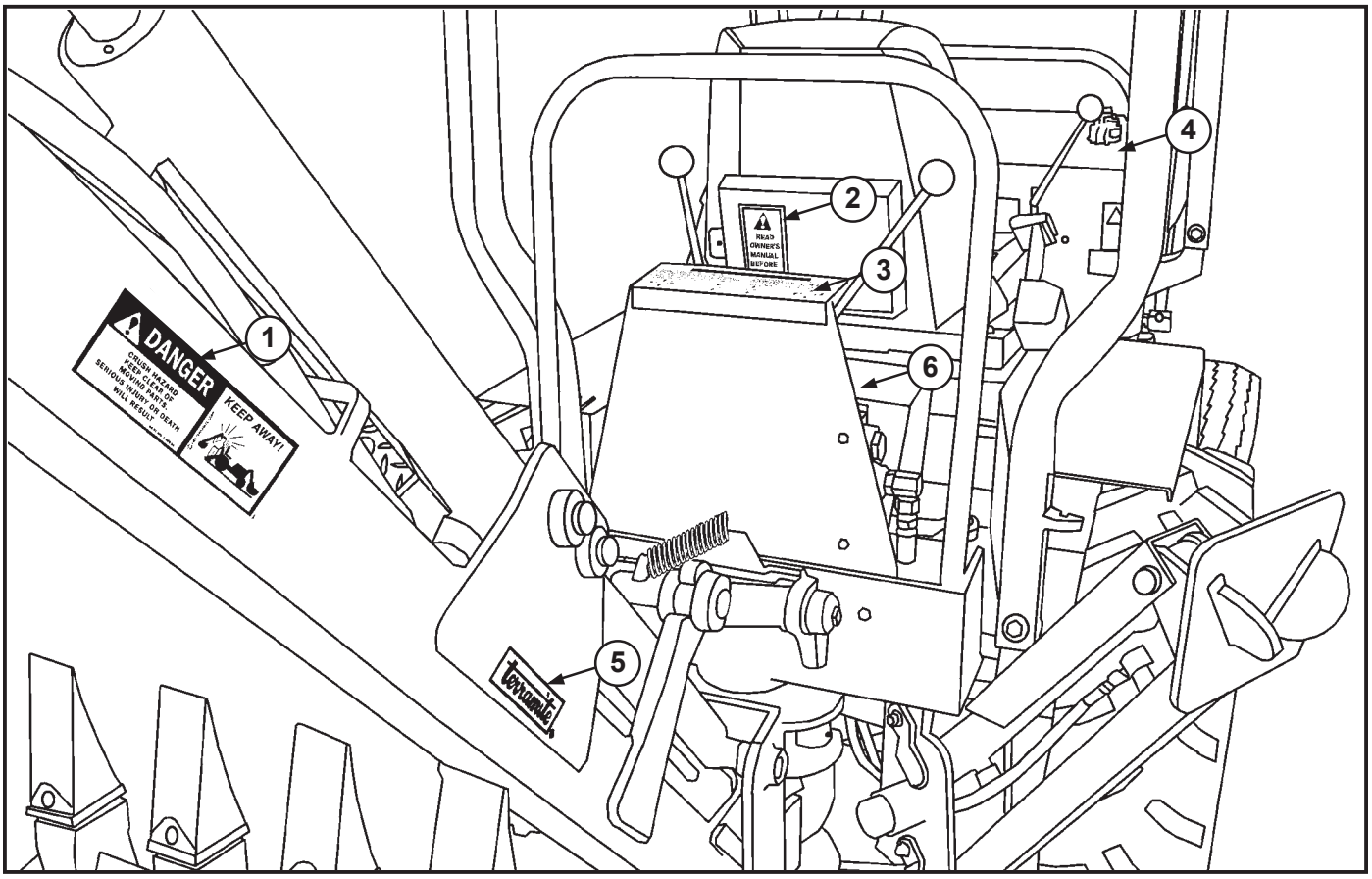

1

2

3

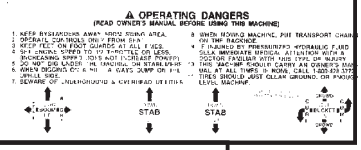

4

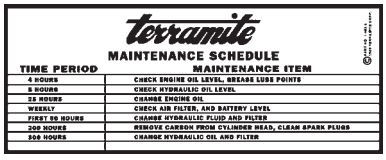

5

6

ITEM	PART NUMBER	DESCRIPTION	QTY.
1	14054	Decal, Danger, Crush Hazard	1
2	14046	Decal, Read Owners Manual	1
3	14050	Decal, Wobblestick & Operator Hazard	1
4	14005	Decal, Maintenance Gas Only (Located Under Hood)	1
	14510	Decal, Maintenance Diesel Only NOT SHOWN	
5	14055	Decal, Small Terramite	2
6	14053	Decal, Warning Call Before You Dig	1

Copyright © 2006 Terramite Corporation

Courtesy of Machine.Market

PARTS

I.D. of Magnalloy Hub	Part #	New #
3/4”	1-66.18	#61618
7/8”	1-66.5	#61605
1”	1-66.2	#61602
1 1/8”	1-66.19	#61619

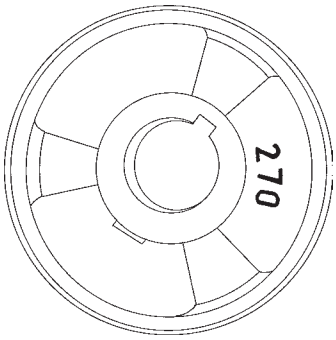

1-66.1 Rubber Insert

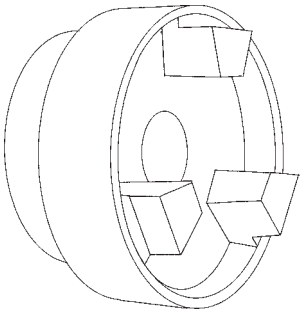

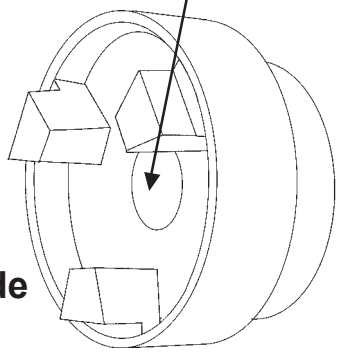

Engine Side

Magnalloy Style Coupling Screed, T3 - T3-15 & T4 Only

I.D. of UCC	Hub/Part #
7/8”	1-66.24
1”	1-66.25
7/8	#61626
1”	#61625

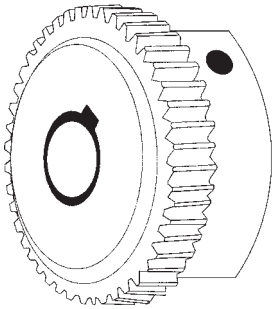

UCC Hub
(Specify Engine Or Pump Side)

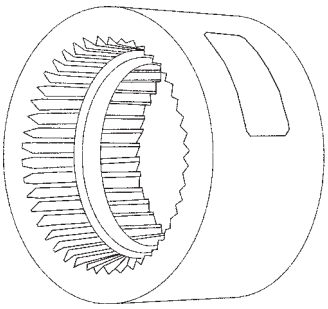

UCC Sleeve Coupling
(Blue, Nylon)

UCC Style Coupling T5-T5B Some T5C

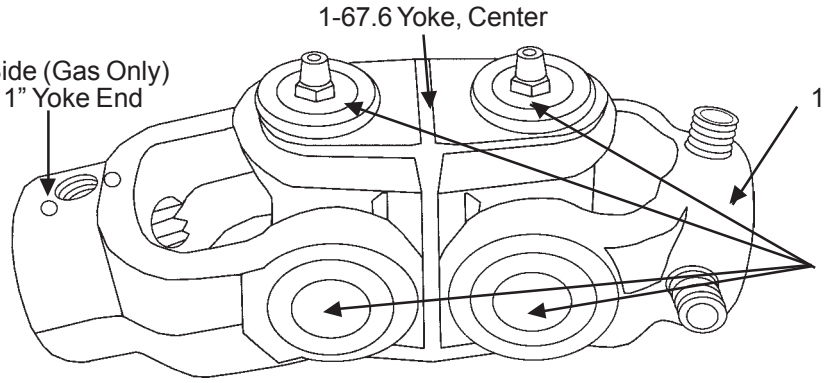

Note:
Diesel Yoke
1-67.10

Drive Shaft Coupling

T5C Only
Since Jan. 91

Copyright © 2006 Terramite Corporation
Courtesy of Machine.Market

Terramite Suggests Keeping a Current Journal on Replacement Parts for Quick Reference or Field Notes on Your Machine

Remember to Read, Understand and Follow Your Operator's Handbook on Safety and the Correct Procedure for Safe Operation and Handling of Your Compact Tractor Loader Backhoe.

Copyright © 2006 Terramite Corporation

Courtesy of Machine.Market

T5C Wiring Diagram Kohler Magnum 20 HP

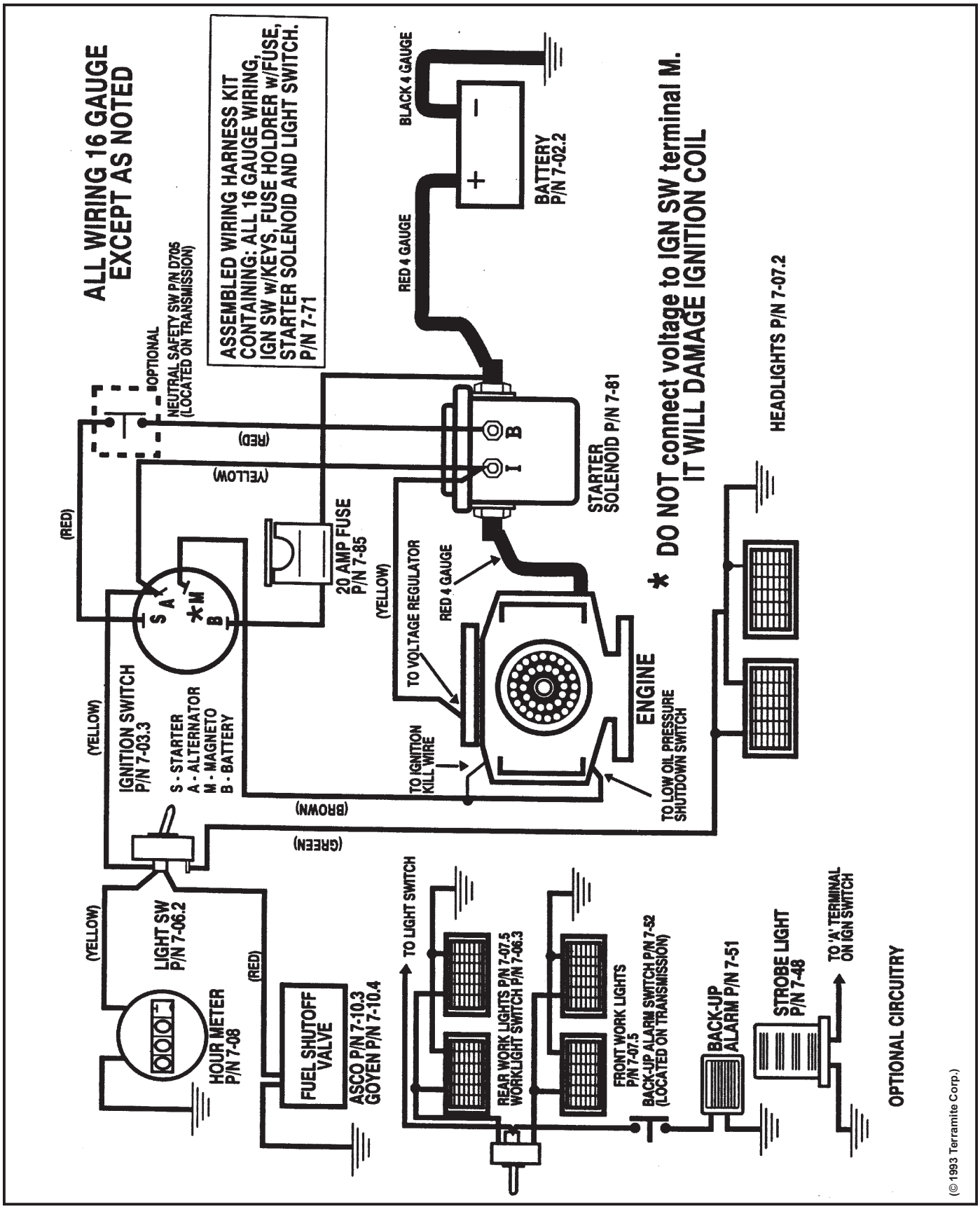

Copyright © 2006 Terramite Corporation
Courtesy of Machine.Market

T5C Wiring Diagram Kohler Command 20/25 HP

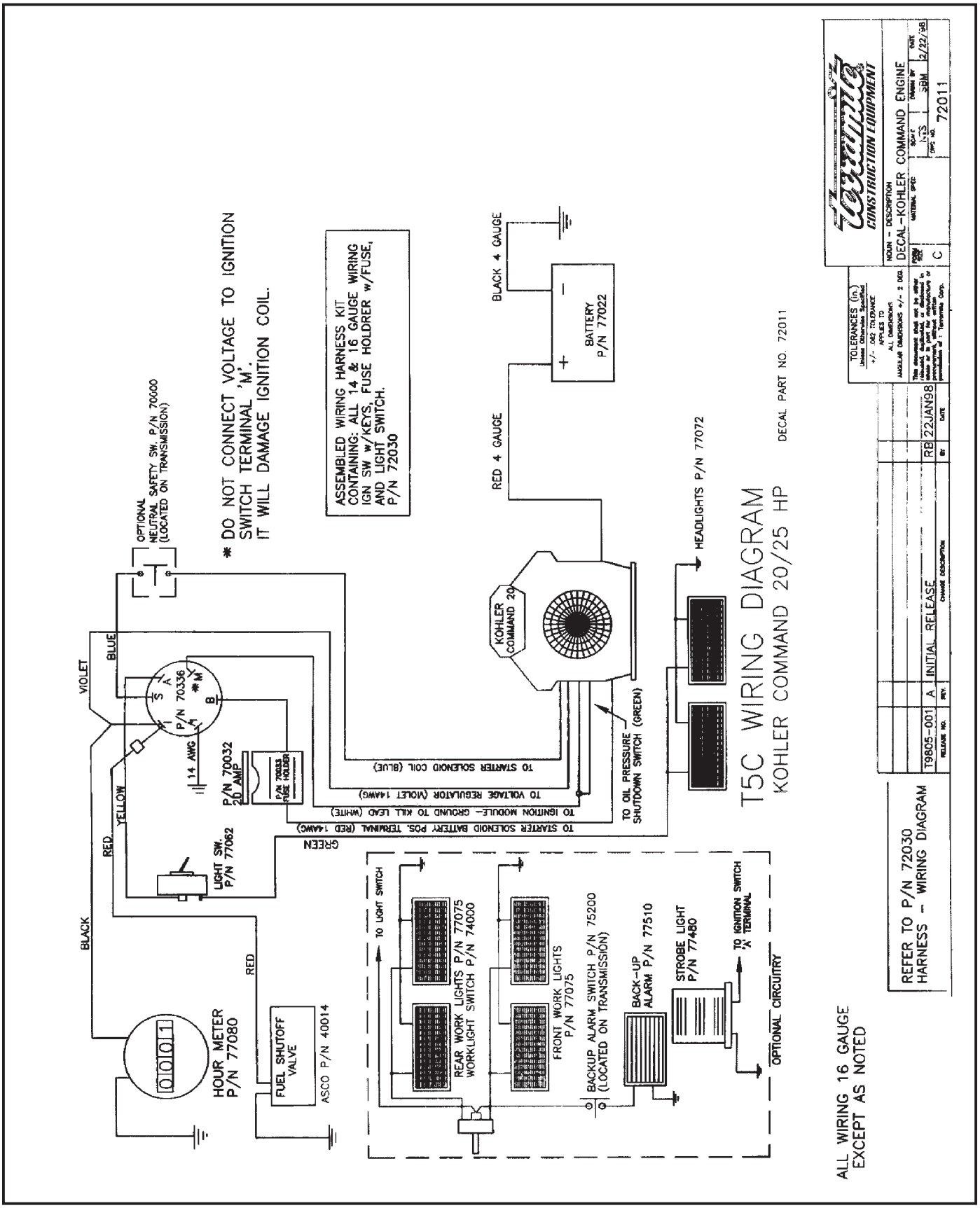

Copyright © 2006 Terramite Corporation

Courtesy of Machine.Market

Harness/A-Kohler Command

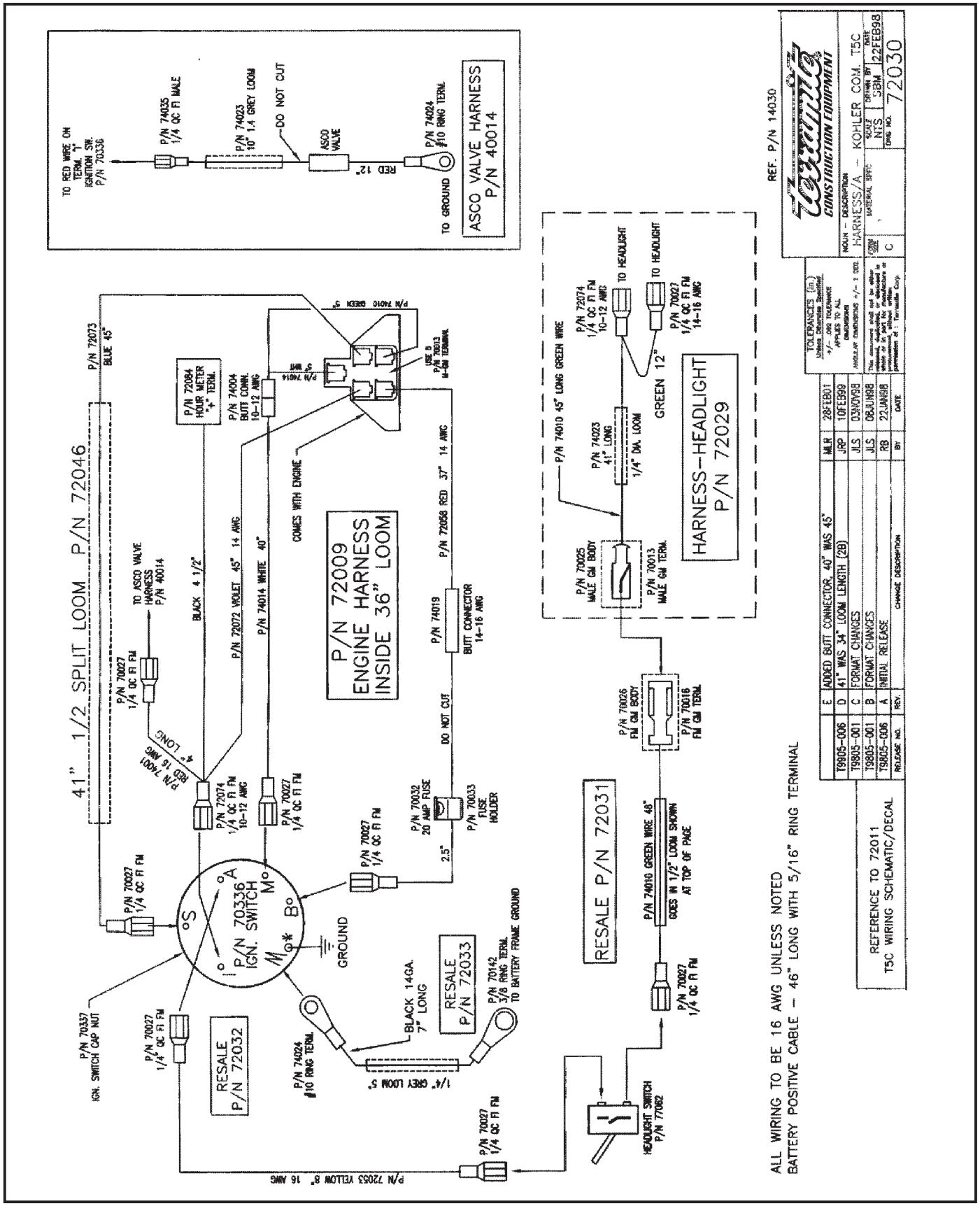

Copyright © 2006 Terramite Corporation
Courtesy of Machine.Market

T5C Wiring Diagram Honda 20 HP PRIOR TO 10/2000

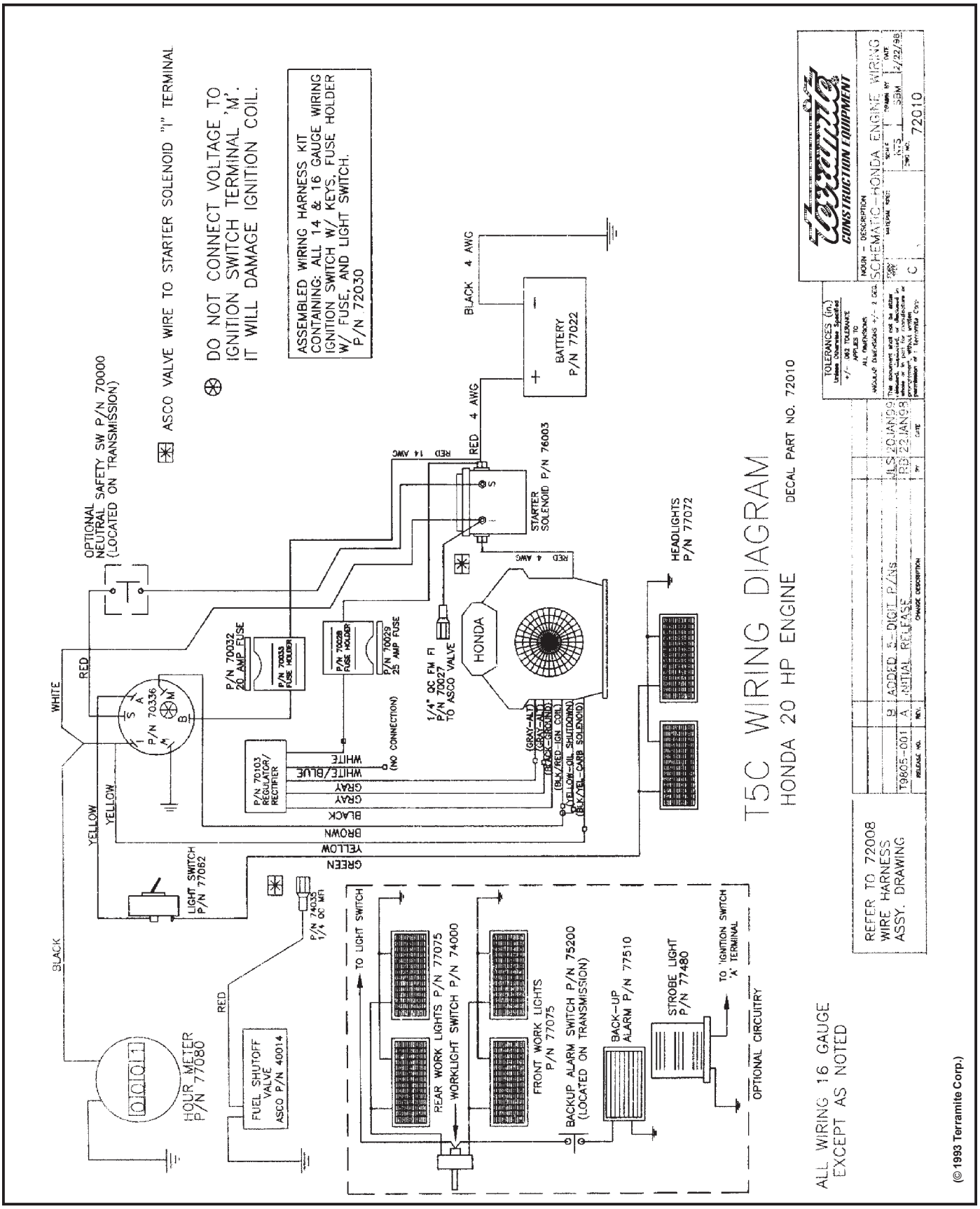

Copyright © 2006 Terramite Corporation
Courtesy of Machine.Market

Pre - 1997 Model T5C Wiring Diagram Honda 20 HP

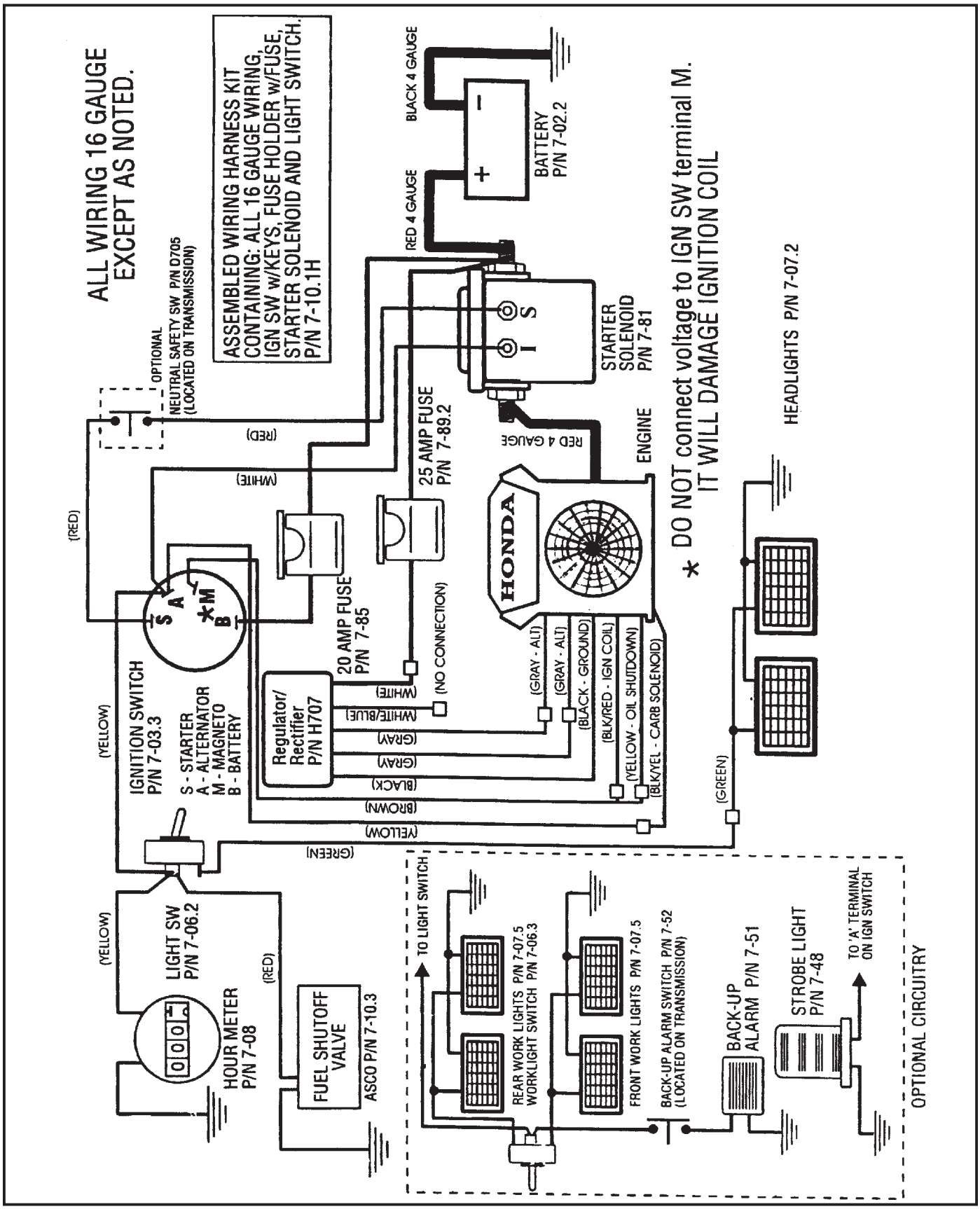

Copyright © 2006 Terramite Corporation

Courtesy of Machine.Market

Harness/ A-Relay Harness T5C

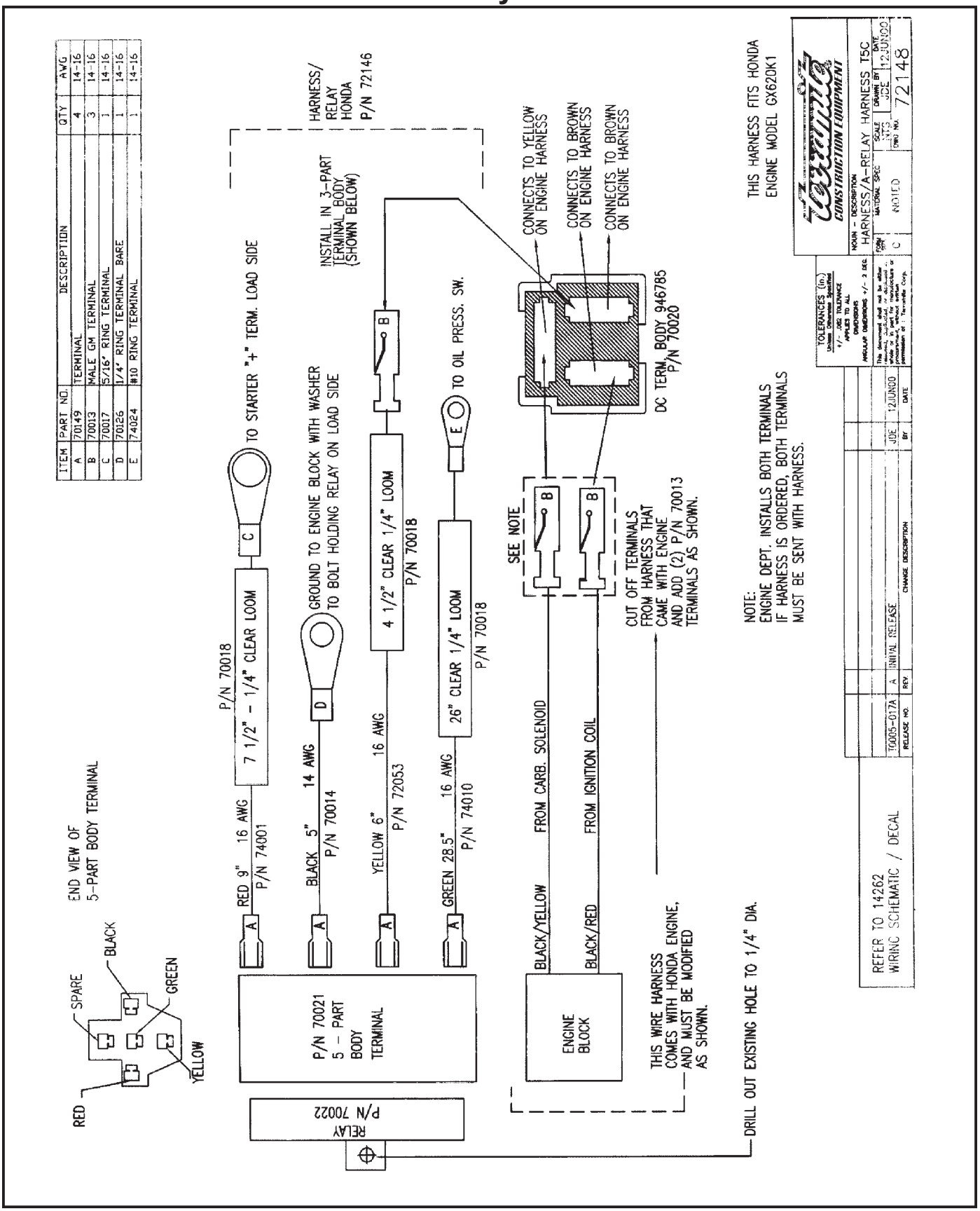

Copyright © 2006 Terramite Corporation

Courtesy of Machine.Market

Harness/ Honda Engine T5C

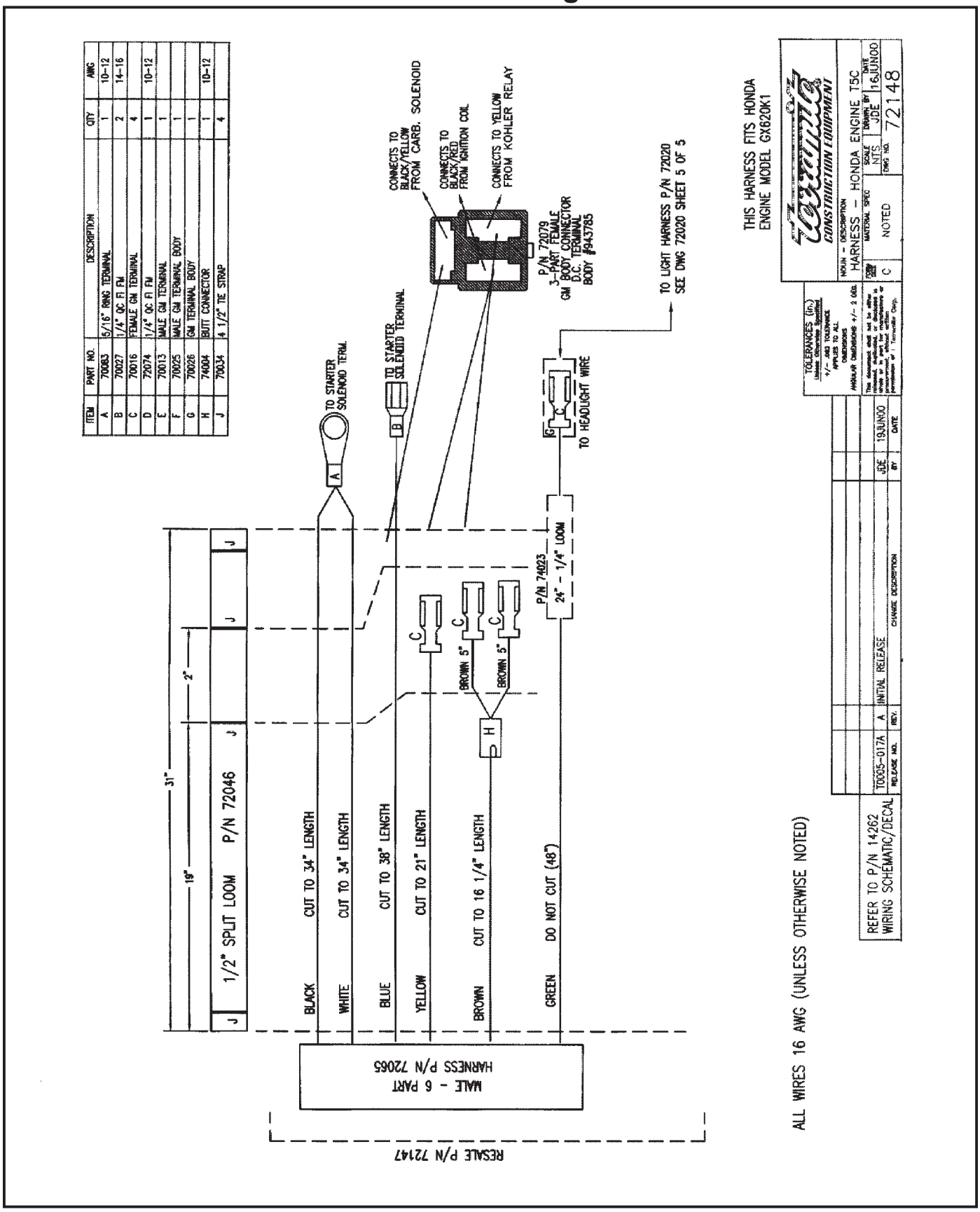

Copyright © 2006 Terramite Corporation

Courtesy of Machine.Market

Harness/ Honda Voltage Regluator Harness/ A-Relay Harness

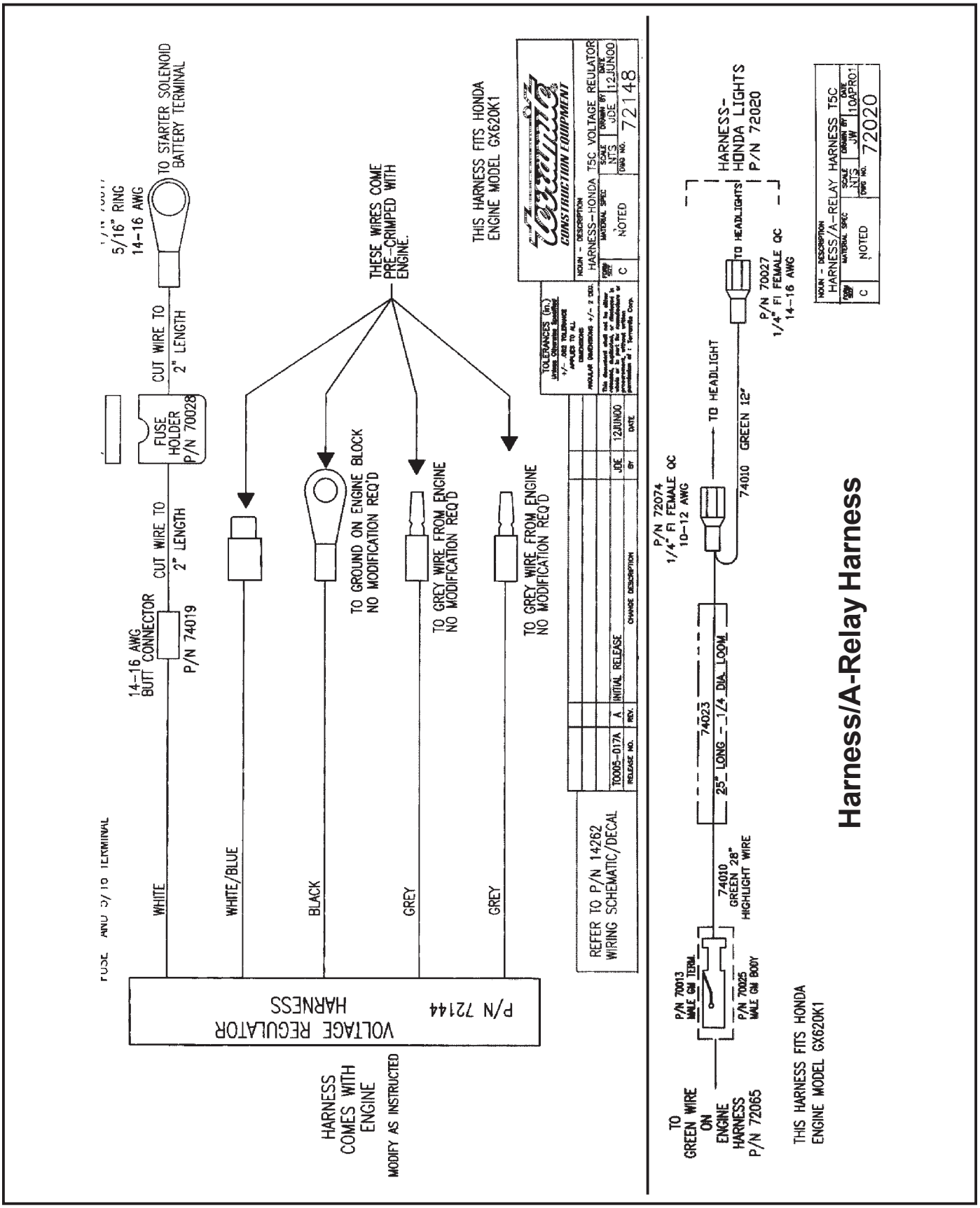

Copyright © 2006 Terramite Corporation

Courtesy of Machine.Market

Harness - Honda DashT5C

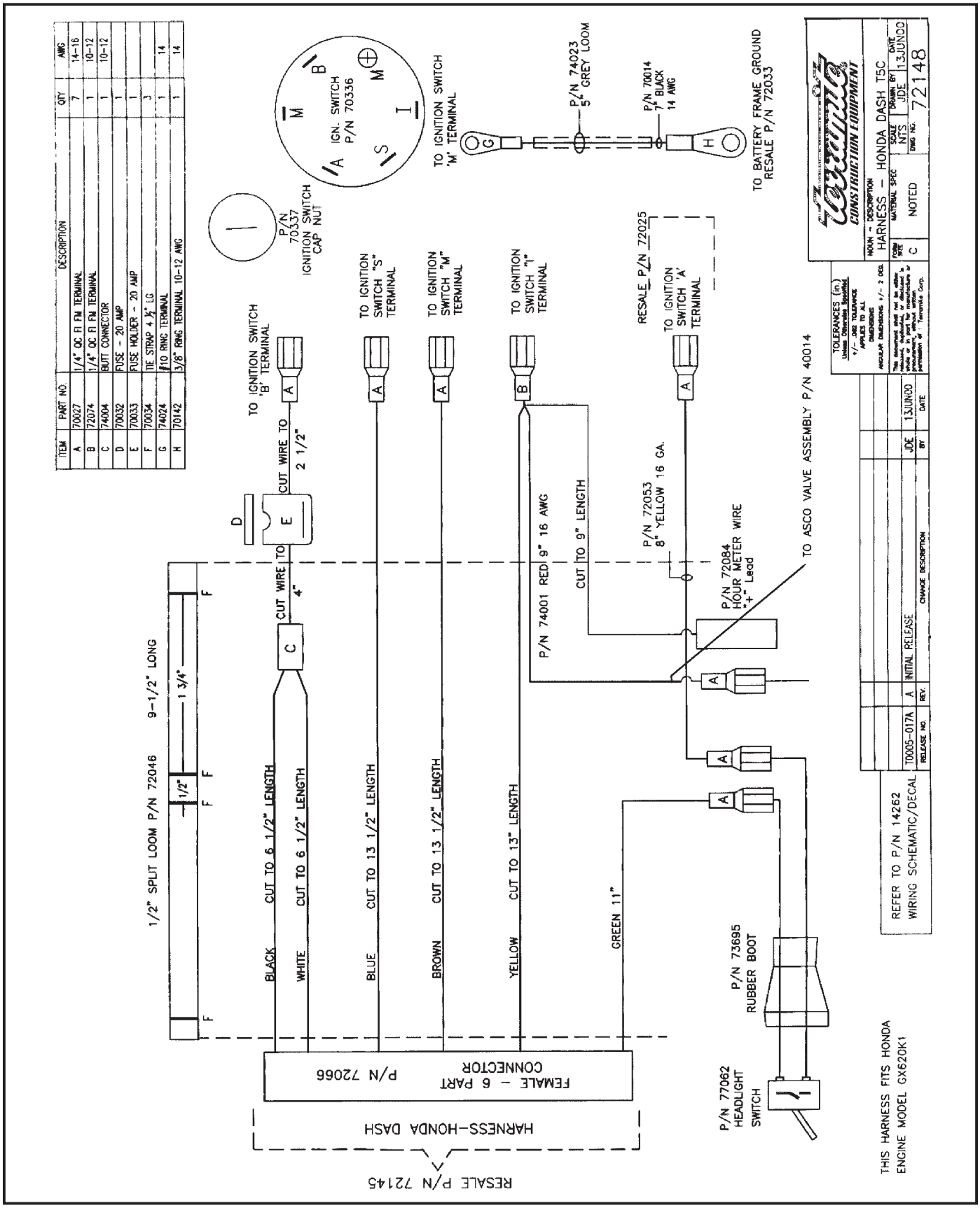

Copyright © 2006 Terramite Corporation

Courtesy of Machine.Market

Terramite Suggests Keeping a Current Journal on Replacement Parts for Quick Reference or Field Notes on Your Machine

Remember to Read, Understand and Follow Your Operator's Handbook on Safety and the Correct Procedure for Safe Operation and Handling of Your Compact Tractor Loader Backhoe.

Copyright © 2006 Terramite Corporation

Courtesy of Machine.Market

Tires

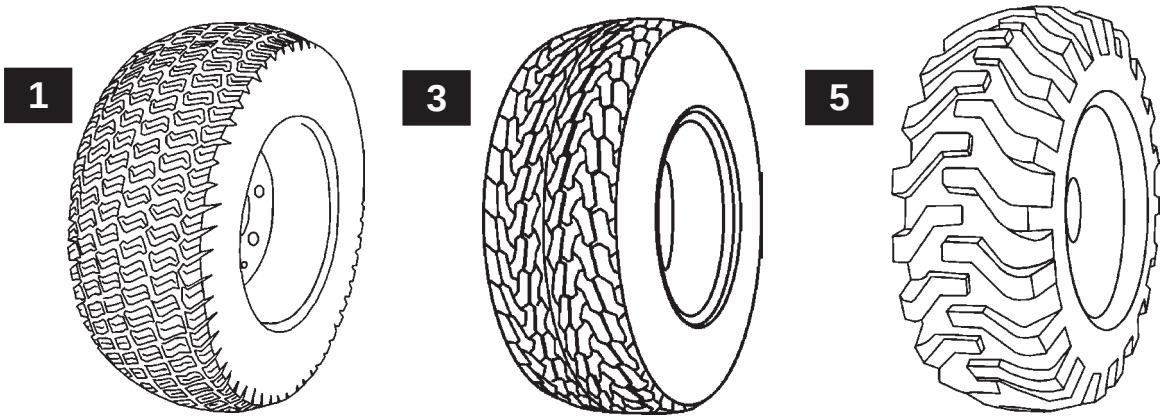

FRONT TIRES

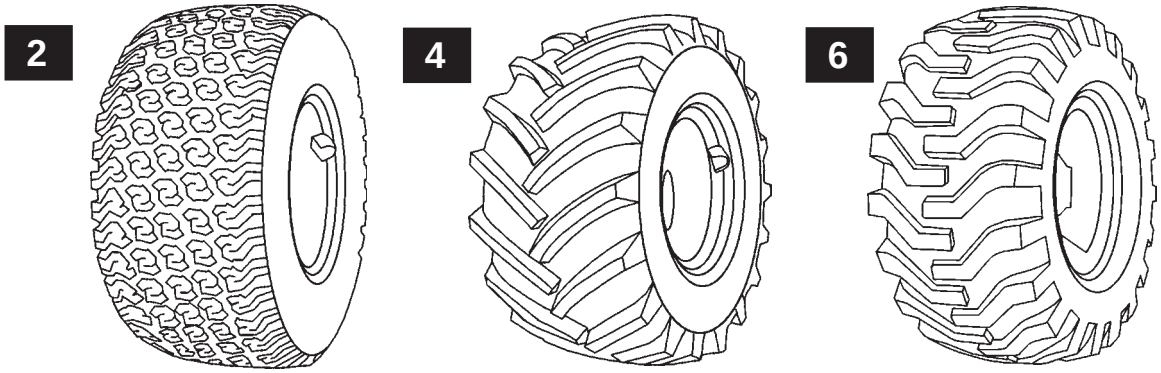

REAR TIRES

ITEM	PART NUMBER	DESCRIPTION	RIM INFORMATION		QTY.
1	51274	Front Tire		PN #52871	2
	52741	Front Tire	Mounted on 4 Hole Rim (1-29.2) used prior to 6-96		
	52771	Front Tire	Mounted on 5 Hole Rim (1-29.6) used after 6-96		
2	51174	Softrac Rear Tire		PN #51184	2
	51741	Softrac Rear Tire	Mounted on 15"x13" Rim (1-18.3) used prior to 11-95		
	51771	Softrac Rear Tire	Mounted on 15"x13" Rim (1-18.5) used after 11-95		
3	51272	Std. Front Tire (prior to 3-03)		PN #52871	2
	52721	Std. Front Tire (prior to 3-03)	Mounted on 4 Hole Rim (1-29.2) used prior to 6-96		
	52761	Std. Front Tire (prior to 3-03)	Mounted on 5 Hole Rim (1-29.6) used after 6-96		
4	51173	HF Rear Tire		PN #51184	2
	51761	HF Rear Tire	Mounted on 15"x13" Rim (1-18.3) used prior to 11-95		
	51731	HF Rear Tire	Mounted on 15"x13" Rim (1-18.5) used after 11-95		
5	51034	Industrial Front Tire	Mounted 12" X 7" Rim (1-29.6) used after 2-03	PN #50021	2
6	51030	Industrial Rear Tire	Mounted on 5 Hole Rim (1-29.6) used after 2-03	PN #50022	2

Copyright © 2006 Terramite Corporation

Courtesy of Machine.Market

View of Work Lights and Canopy

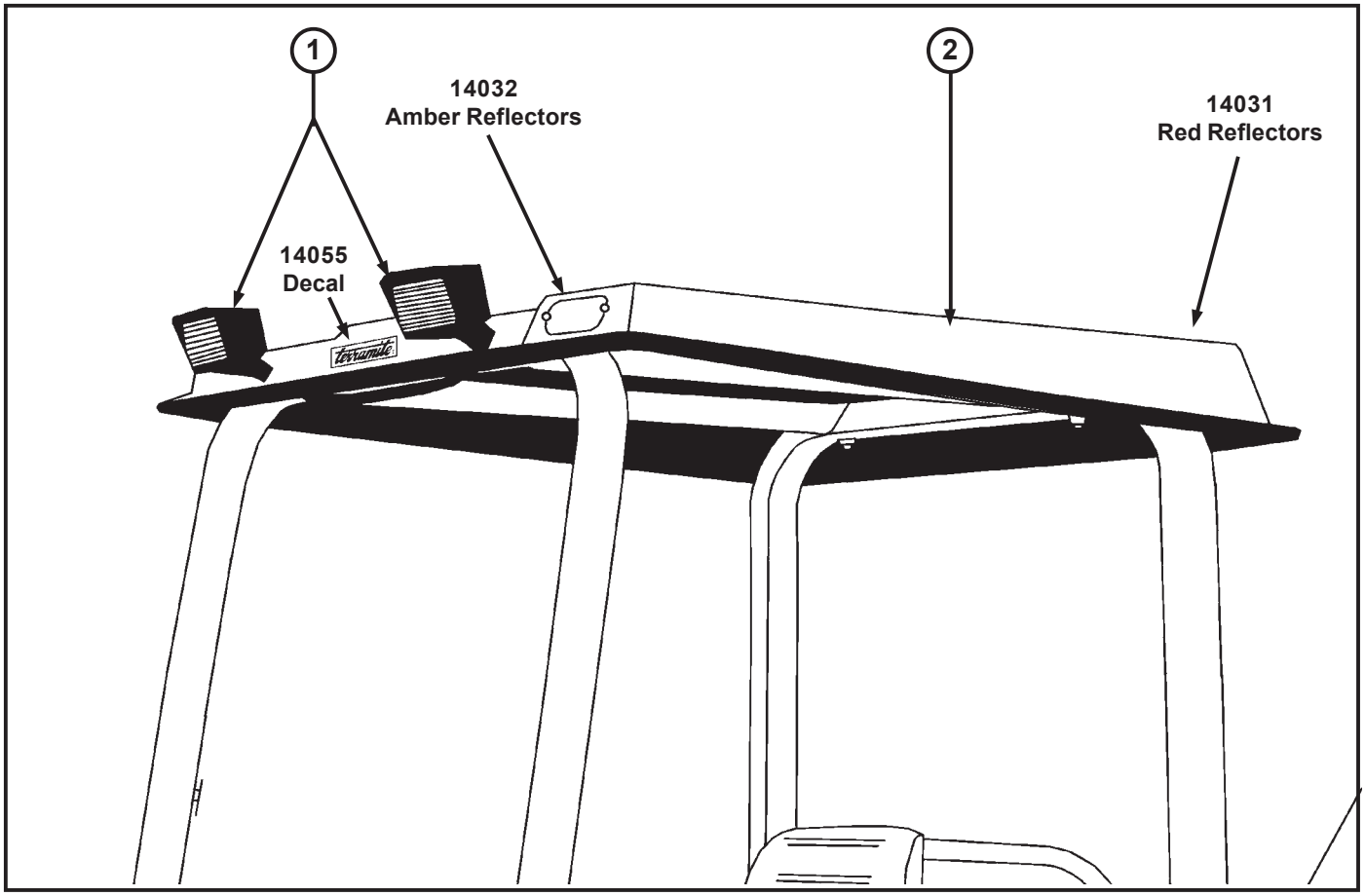

ITEM	PART NUMBER	DESCRIPTION	QTY.
1	77075	Light, Flood, Rect.	2or4
2	18007	Canopy, Fiberglass Only (resale)	1
	18067	Canopy w/Hardware Fits 2 post ROPS style machine prior to 1-97 (NOT SHOWN)	
3	77075	Work Lights, Front and Back Mount	4
4	77480	Strobe Light	1

View of Work Lights Mounted Front and Back

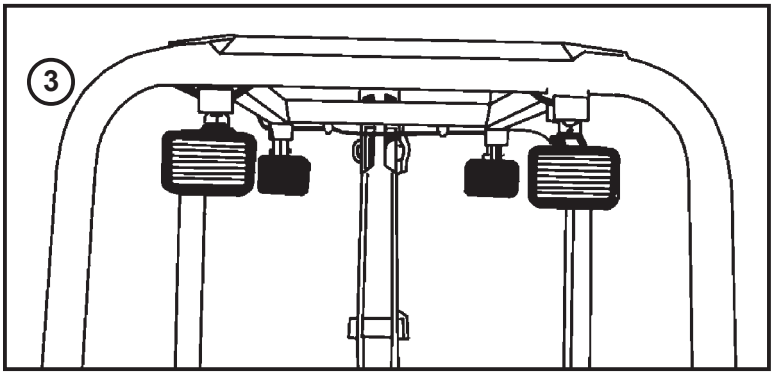

Strobe Light

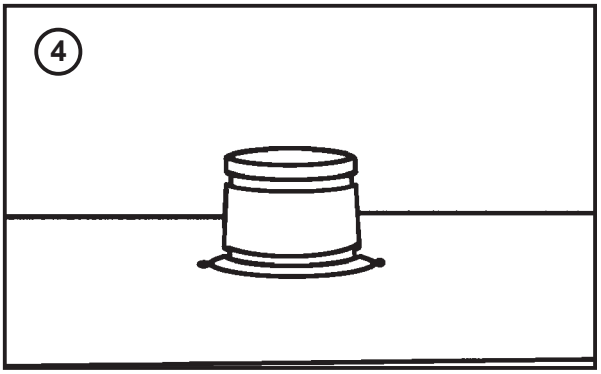

Copyright © 2006 Terramite Corporation
Courtesy of Machine.Market

Clam Shell 4 in 1 Bucket

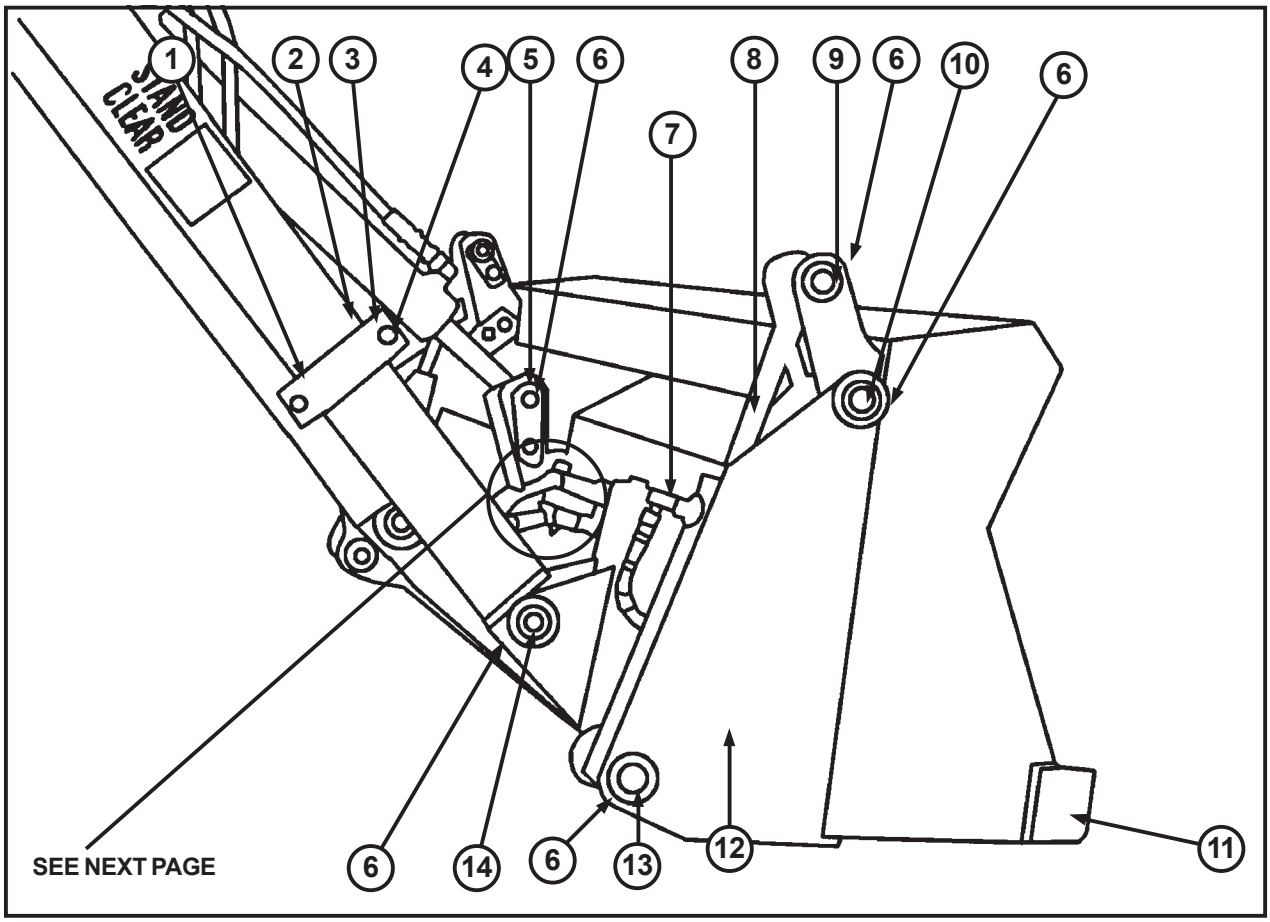

ITEM	PART NUMBER	DESCRIPTION	QTY.
1	85072	Guide w/Hose	1
2	85010	Strap - Hose Guide	1
3	22025	Bolt, 1/4" x 3/4" LG	2
4	28504	Nut, 1/4" Lock	2
5	13000	Pin/w - Front Curl Cylinder (Rod)	1
6	20082	Nut, 3/8" - 16NC Flange	9
7	22174	Fitting - 1/4" Straight Male to 1/4" Female Swivel 90°	2
8	81126	Cylinder/A, Clam Bucket	2
9	17136	Pin/w - Clam Cylinder (Rod End)	2
10	17138	Clam/w - 4 in 1	1
12	19333	Blade/w - 4 in 1 Clam	1
13	17137	Pin/w - Clam Cylinder (Barrel End)	2
14	13200	Pin/w - Bucket to Loader Arms	2

Copyright © 2006 Terramite Corporation

Courtesy of Machine.Market

View from Under Dash for Clam Shell 4 in 1 Bucket

(Only as Factory Installed Option)

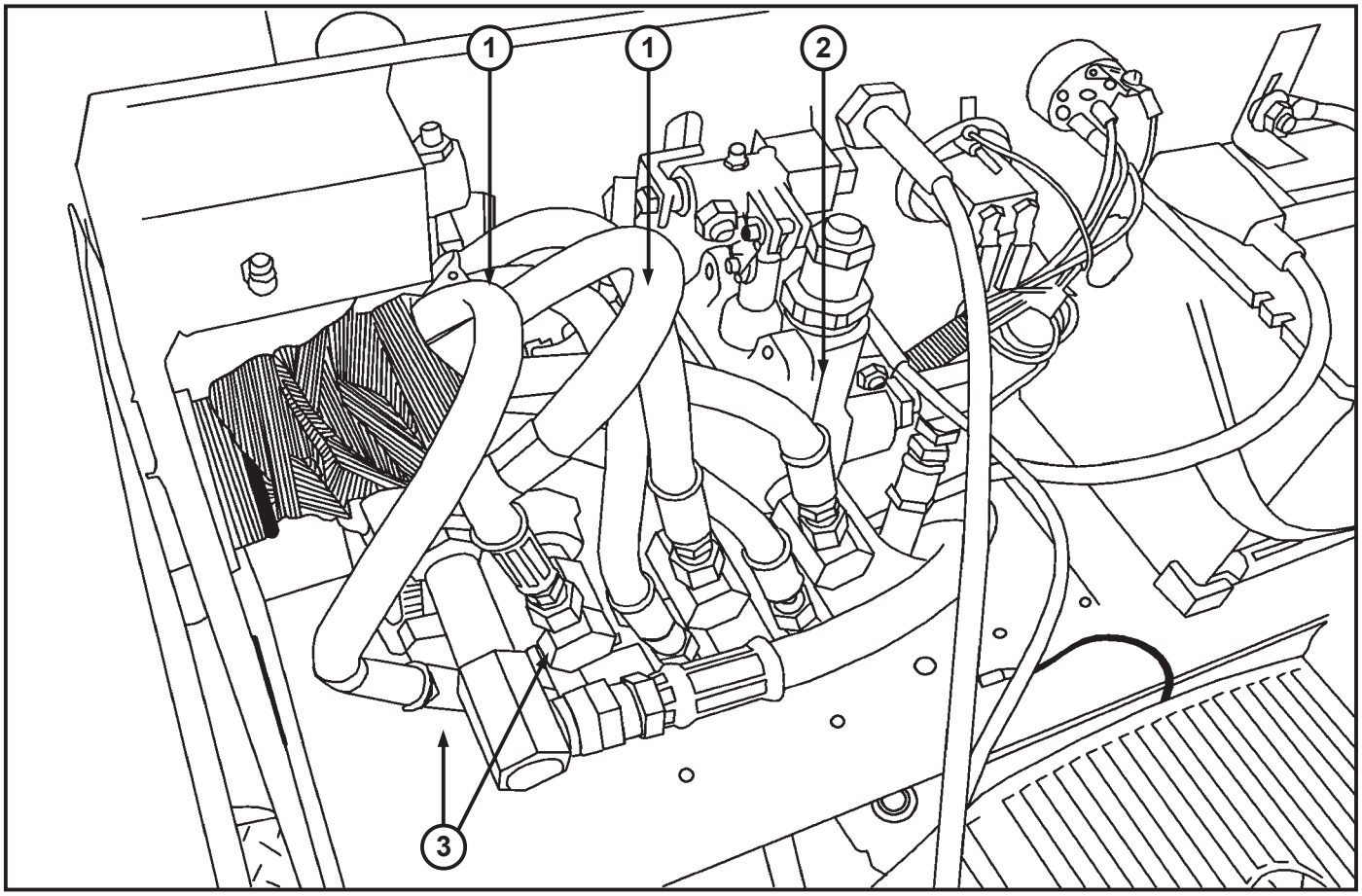

ITEM	PART NUMBER	DESCRIPTION	QTY.
1	84102	Hose, 1/4" x 104"	2
2	20146	Valve, Loader, 3 Spool (Used with Clam Shell Bucket Only)	1
3	22784	Fitting, 1/2"M 90° x 1/4"M Swivel	2

Copyright © 2006 Terramite Corporation
Courtesy of Machine.Market

View of Clam Shell 4 in 1 Bucket from Drivers Position

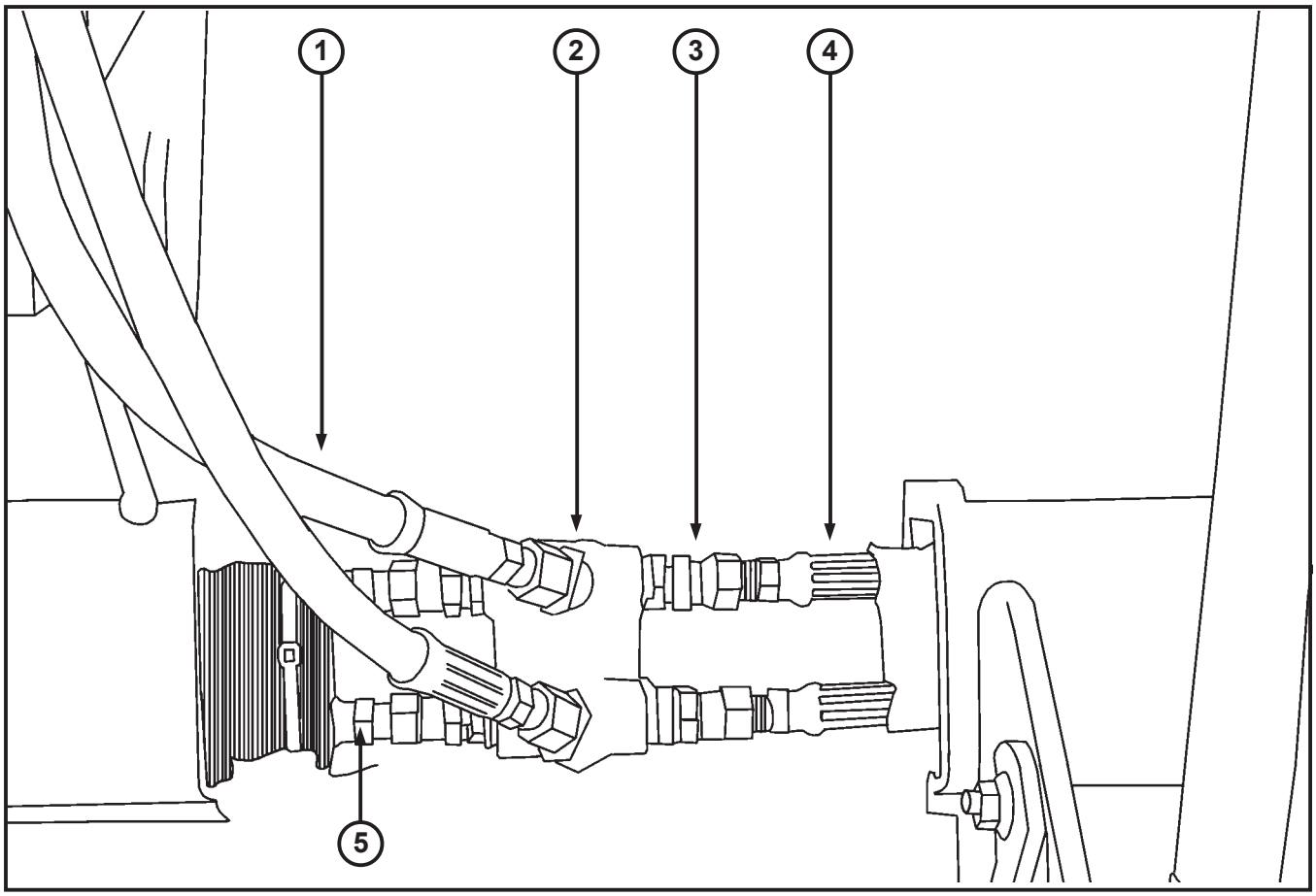

ITEM	PART NUMBER	DESCRIPTION	QTY.
1	84102	Hose/A - 1/4" Male Pipe Ends 102" Lg.	2
2	23174	Fitting - 1/4" Male to 45˚, 1/4" Female Swivel	2
3	20174	Fitting - 1/4" Straight Male to 1/4" Female Swivel	4
4	88418	Hose/A - 1/4" Male Pipe Ends 18" Lg.	2
5	80054	Hose/A - 1/4" Male Pipe Ends 36" Lg.	2
6	21403	Handle, Loader, Black (Used with Clam Shell Bucket Only)	1

View of Dash for Clam Shell 4 in 1 Bucket

(Only as Factory Installed Option)

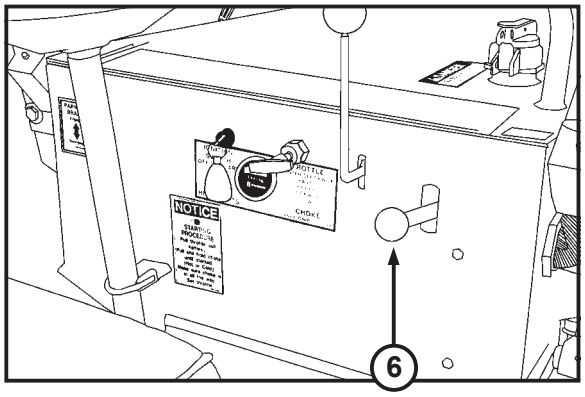

Copyright © 2006 Terramite Corporation
Courtesy of Machine.Market

View of Street Pads

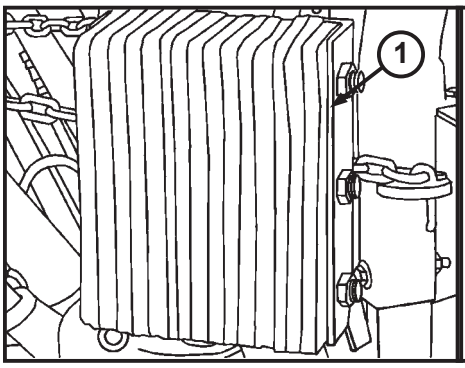

Flip Over Pad

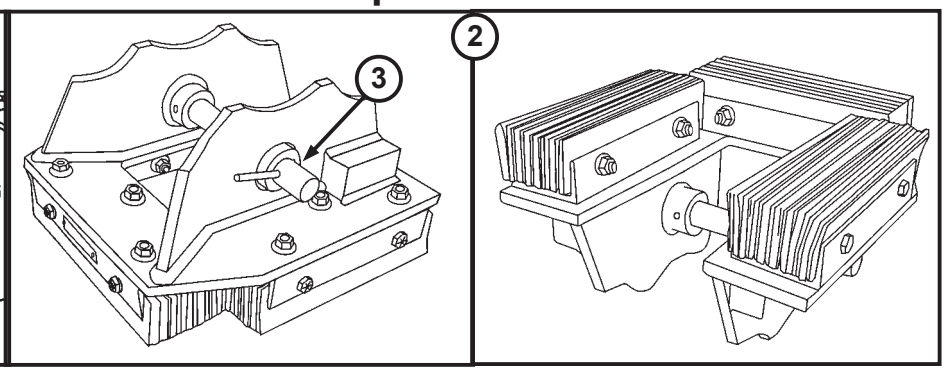

ITEM	PART NUMBER	DESCRIPTION	QTY.
1	11595	Street Pad, Detachable	2
2	11129	Flip Over Pad	2
3	17156	Pin, Pull 1" x 4 1/8"	2
NOT SHOWN	11599	Street & Cleat Pad Kit, Detachable	1

Tooth Caps

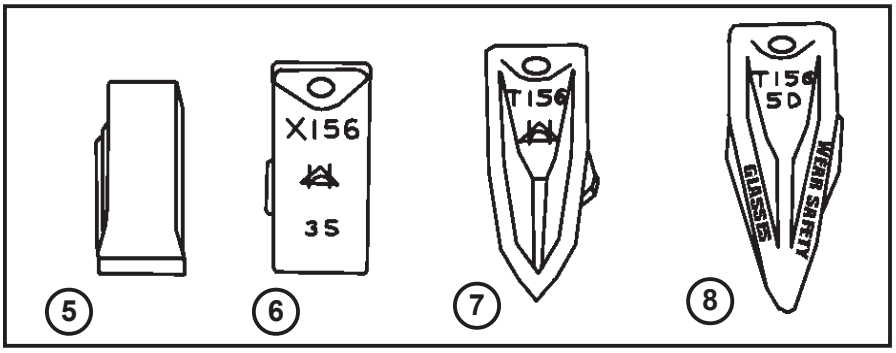

NOTE: When installing new caps product number should be on the inside and brand name should be to outside.

9 ROL/PIN Not Shown

10 Tooth Cap Not Shown

ITEM	PART NUMBER	DESCRIPTION	QTY.
5	10587	Tooth Cap Fits machines built from 2-87 to 12-89	NA
6	10500	Tooth Cap Fits machines built after 1-90	NA
7	10590	Tiger Tooth Fits machines built after 1-90	NA
8	10591	Tiger Tooth Fits machines built after 1-90	NA
9	10530	Roll/Pin	NA
10	19036	Tooth Cap 65-2-87	NA
11	19114	Kit Includes Shank, Tooth and Pin	
12	10510	Weld on Shank	
SPECIAL TOOL	10599	Punch, for 1-05.SD & TT Tooth Caps	

Copyright © 2006 Terramite Corporation
Courtesy of Machine.Market

Quick Attach Backhoe Buckets after May 1, 1998

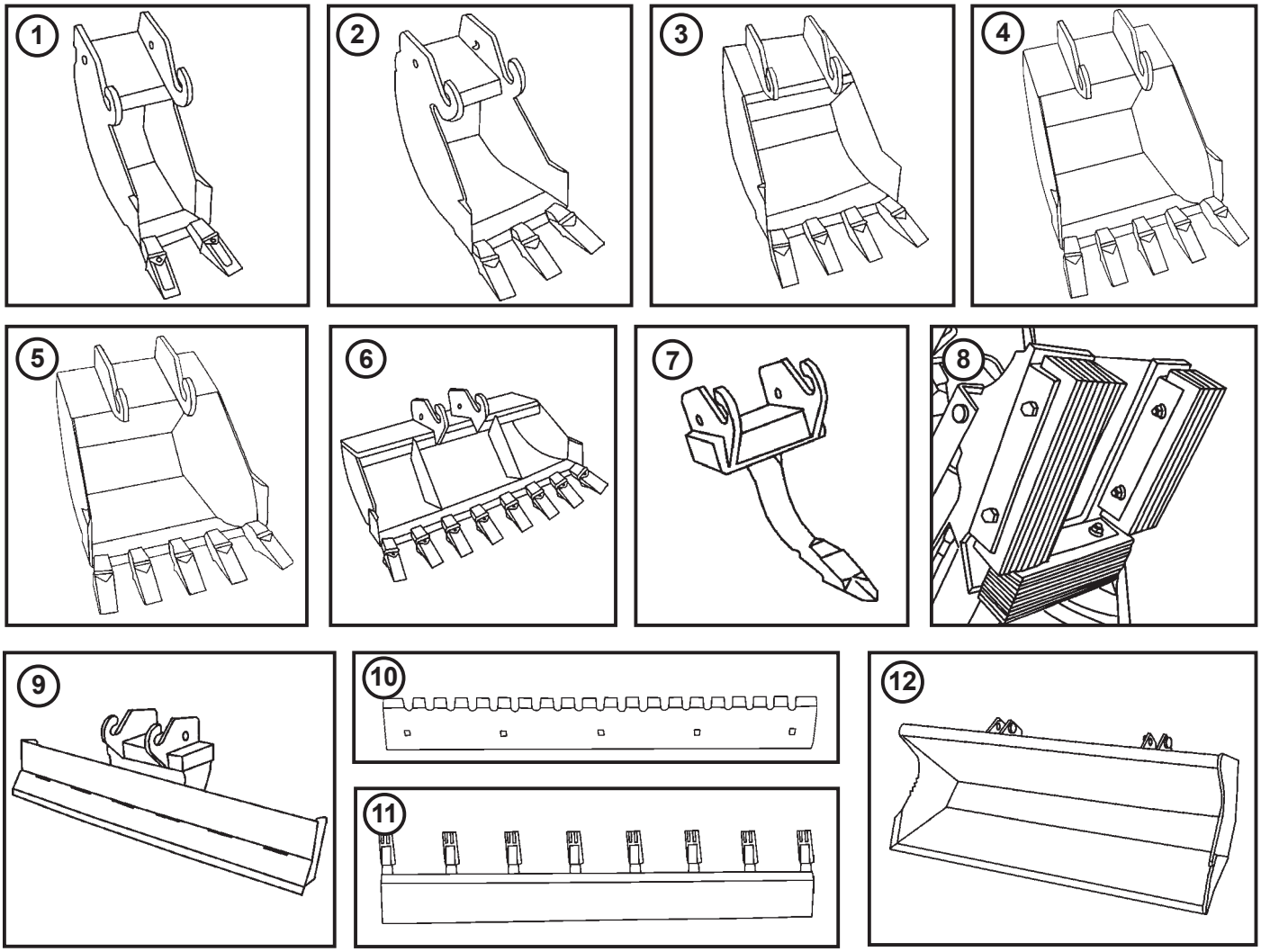

ITEM	PART NUMBER	DESCRIPTION	QTY.
1	19133	Bucket, 8”, Quick Attach, T5C/T7	1
	19279	Bucket, 10", Quick Attach, T5C/T7	
2	19069	Bucket, 12”, Quick Attach, T5C/T7	1
3	11160	Bucket, 16”, Quick Attach, T5C/T7 (Standard)	1
	19265	Bucket, 18”, Quick Attach, T5C/T7	
4	19183	Bucket, 20”, Quick Attach, T5C/T7	1
5	19212	Bucket, 24”, Quick Attach, T5C/T7	1
6	19146	Bucket, 36”, Quick Attach, T5C/T7	1
	19155	Bucket, 38”, Quick Attach, T5C/T7	
7	19297	Ripper, Quick Attach, T5C/T7	1
8	11129	Outrigger Pad Assembly, Flip Over T5C/T7	2
9	19370	Blade, Landscape, Quick Attach, T5C/T7	1
10	19438	Edge, Cutting, Serrated, 56” w/Bolts, T7	1
11	19436	Edge, Cutting, Bolt-On, 56” w/Bolts, T7	1
12	19451	Bucket, Loader, Flat Bottom, 56" T7	1

Copyright © 2006 Terramite Corporation

Courtesy of Machine.Market

View of Auger

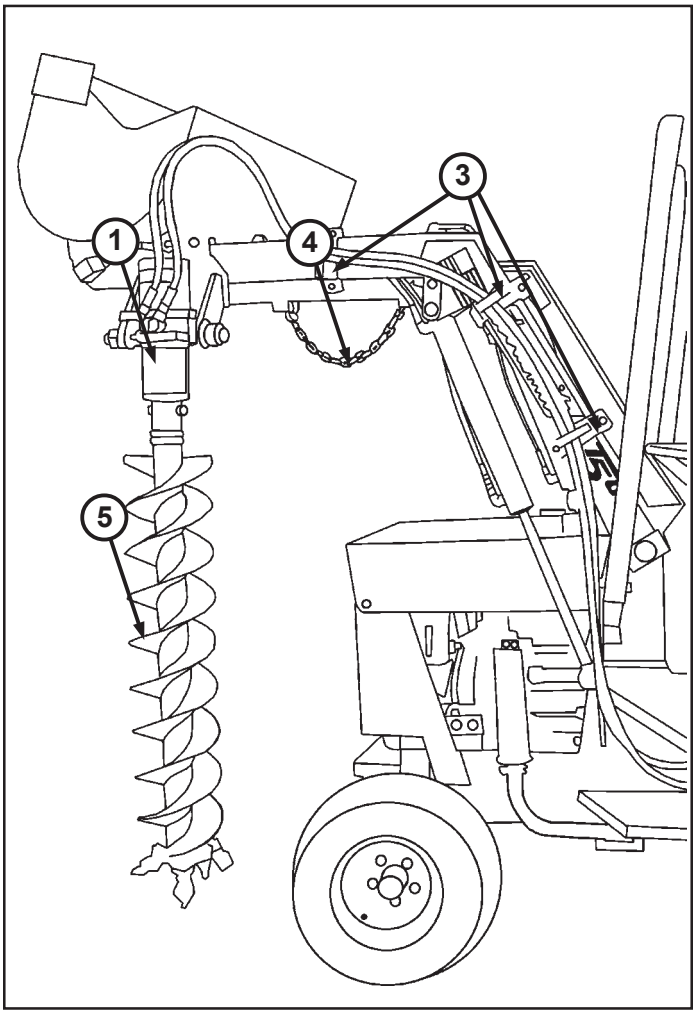

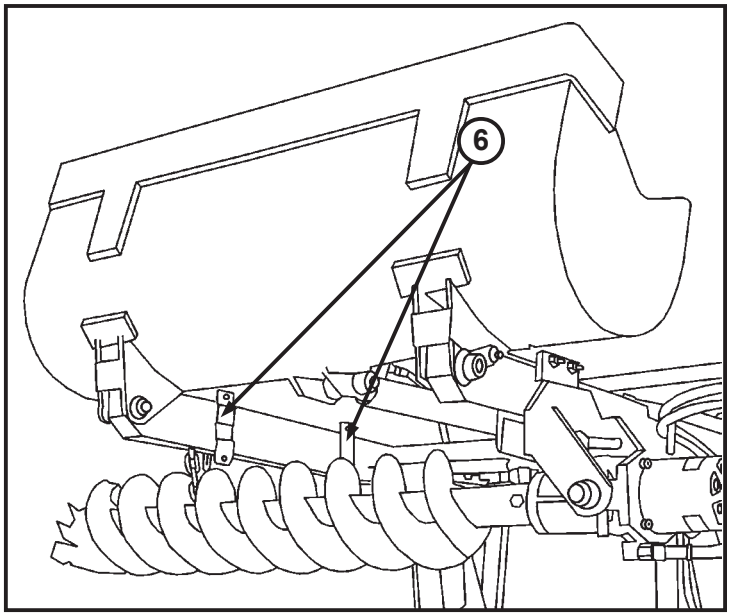

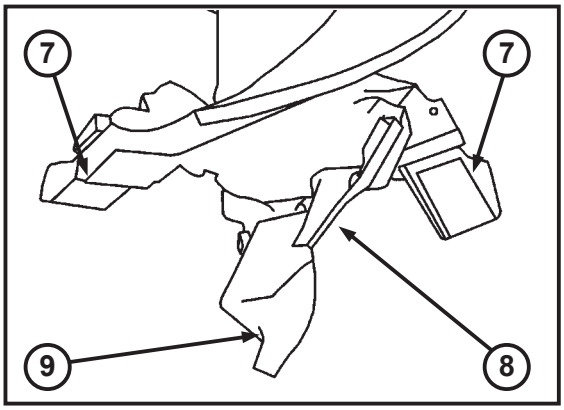

ITEM	PART NUMBER	DESCRIPTION	QTY.
1	13499	Diggerhead, 810 "M" Series	1
2	88115	Hose, 1/2" x 115"*	2
3	13498	Bracket, Hose, Post Drill *	3
4	11165	Chain, 5/16 proof coil (by foot)*	3'
5	13411	Auger, 6" diameter	1
	13404	Auger, 9" diameter	1
	13403	Auger, 12" diameter	1
	13407	Auger, 15" diameter	1
6	13457	Chain Hook Bracket*	2
7	13412	Tooth, Auger, Pengo, Outer	2
8	13413	Tooth, Auger, Pengo, Inner	2
9	13414	Tooth, Auger, Pengo, Point	1
NOT SHOWN	85005	Installation Kit (Complete)	1
NOT SHOWN	13495	Diesel Installation Kit (Complete)	1

*Included with PD5 Installation Kit

Copyright © 2006 Terramite Corporation

Courtesy of Machine.Market

View of Auger Connections

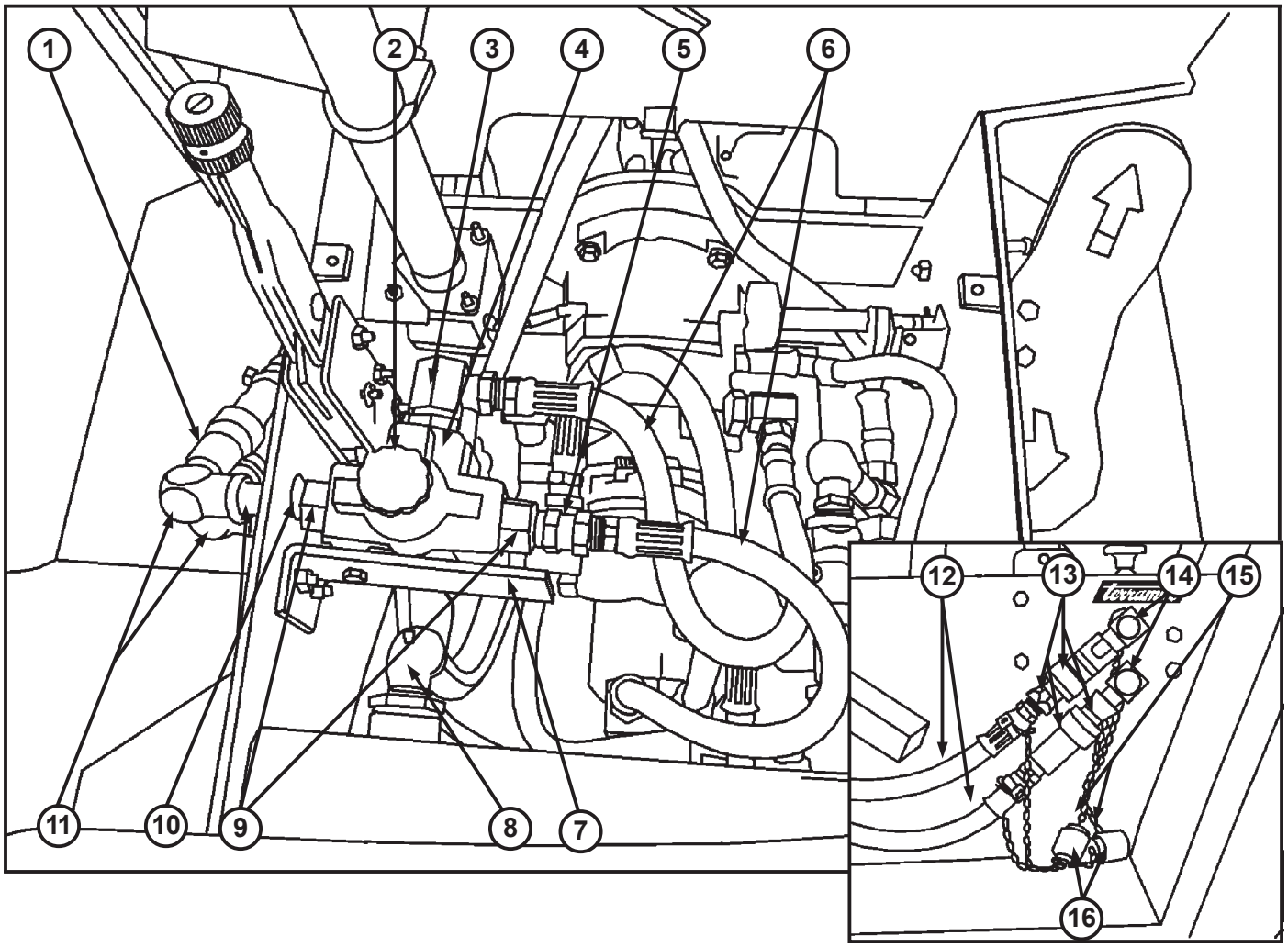

ITEM	PART NUMBER	DESCRIPTION	QTY.
1	20093	Quick Attach Fitting*	2
2	13422	Knob, Valve, Hydraulics, Auger*	1
3	25728	Fitting, 11/16" MB x 1/2" F SW 90º*	3
4	85013	Valve, Hydraulic, Auger*	1
5	21788	Fitting, 1/2" MP x 1/2" FS*	1
6	88820	Hose, 1/2" x 20"*	2
7	13406	Bracket, Valve, Hydraulic, Auger*	1
8	22704	Fitting, 3/4" pipe street ELL**	1
9	25228	Fitting, #12 "O" Ring x 1/2" FPT*	4
10	22702	Fitting, Nipple 1/2" x 3"*	2
11	21288	Fittings, 1/2" MP x 1/2" FP 90º*	3
12	88115	Hose, 1/2" x 115"	2
13	20093	Quick Attach Fitting	2
14	21288	Fittings, 1/2" MP x 1/2" FP 90º*	2
15	25054	Dust Plug-Male (shown coupled to female)	2
16	25294	Dust Cap-Female (shown coupled to male)	2

*Included with PD5 Installation Kit **Included with PD5-D Installation Kit

Copyright © 2006 Terramite Corporation

Courtesy of Machine.Market

View of Back-up Alarm and Connections

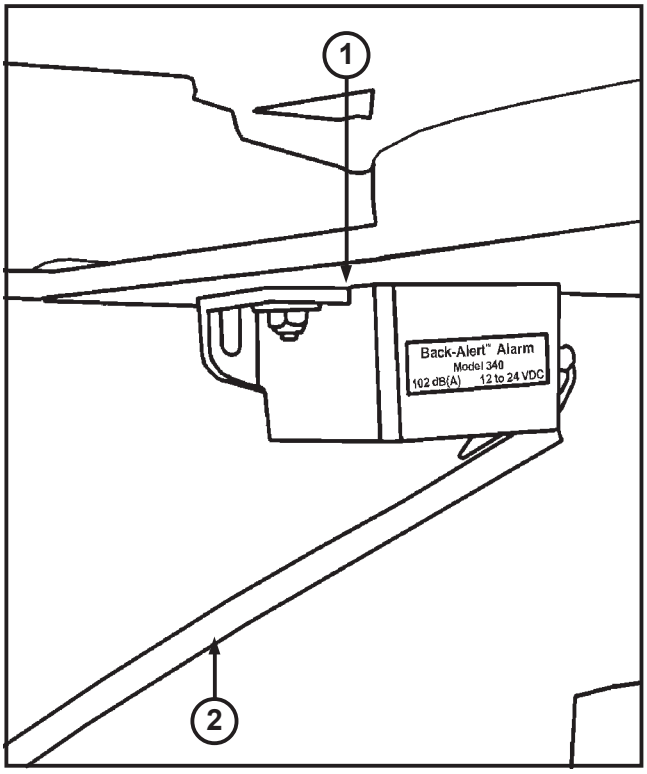

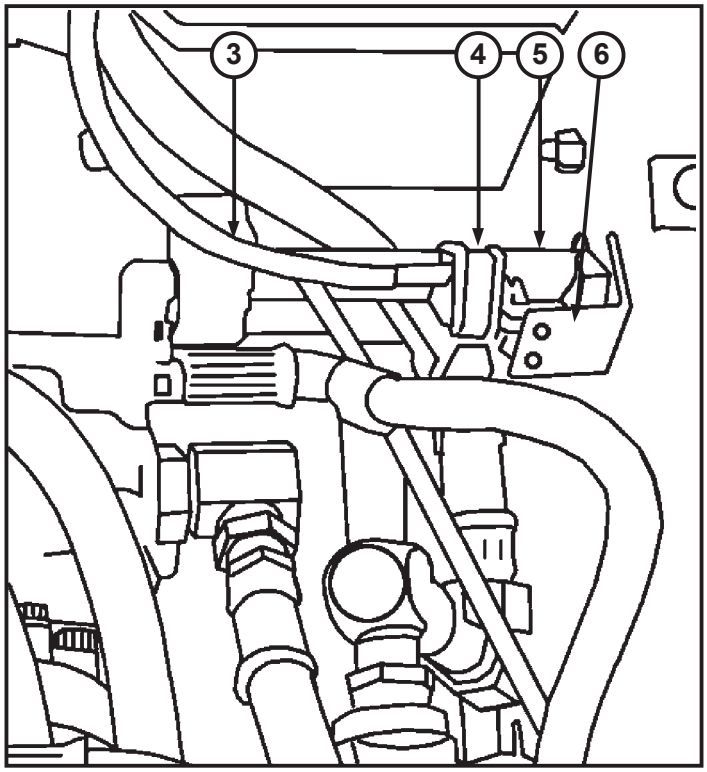

ITEM	PART NUMBER	DESCRIPTION	QTY.
1	77510	Alarm, Back-up*	1
2	77101	Harness, Back-up Alarm*	1
3	77101	Harness, Back-up Alarm*	1
4	75200	Switch, Back-up Alarm*	1
5	61624	Pedal Shaft w/Bracket*	1
6	77522	Bracket, Back-up Alarm Switch*	1
NOT SHOWN	77599	Back-up Alarm Kit	1

*Included in BK-BU.Alarm Kit

Copyright © 2006 Terramite Corporation

Courtesy of Machine.Market

Translation Chart

ENGLISH	FRANÇAIS	DEUTSCH	ESPAÑOL
adapter	adaptateur	Zwischenstück	adaptador
arm	bras	Arm	brazo
axle assembly	essieu ensemble	Achse vollst	eje conjunto
axle shaft	arbre d'essieu	Achsenwelle	barra eje
bearing	palier	Lager	cojinete
body	carrosserie	Karosserie	carrocería
body assembly	ens carrosserie	Karosserie vollst	conj carrocería
bolt	boulon	Bolzen	bulón
boom	flèche	Hubarm	aguilón
boot	capuchon	Kappe	capuchón
bracket	support	Winkel	grampa
brake head assembly	étrier frein ens	Bremskopf vollst	cabeza freno conj
brake lever assembly	ens levier trein	Bremsebel vollst	conj planca freno
brake shoe	patin frein	Bremsschuh	zapata freno
breather	reniflard	Entlüse	carcasa
bucket	godet	Schaufel	cucharón
bushing	chemise	Buchse	buje
button	bouton	Knopf	botón
cable	câble	Kabel, Seil	Cable
cam	came	Nocke	leva
cap	chapeau	Kappe	tapa
carburetor	carburateur (mélangeur)	Vergaser	carburador
case	carter	Gehäuse	caja
chain	chaînes	Kette	cadena
Channel	canal, moulure	U-Träger, Profil	perfil
choke	enrichisseur	Starterklappe	ahogador
circuit breaker	disjoncteur	Unterbrecher	disyuntor
circuit	circuit	Stromkreis	circuito
clamp	attche, collier	Klammer, Einspannbacke	abrazadera
cleaner	épurateur	Luftreiniger	filtro
clevis	chape	Gabelkopf	horquilla
clip	agrafa	Klemme, Bügel	fbroche
collar	collier	Bundring, Flansch	collar
column	montant, colonne	Säule	columna de dirección
cone	cône, bague intériéure	Konus, Kegel	cónico
connecting	de liaison	verbinden	conectar
connection	connexion	Verbindungsstück,	conexión
connector	raccord	Anschluss, Stecker	conector
control	commande	Steuerung, Betätigung	control
converter	convertisseur	Drehmomentwandler	convertidor
cotter pin	goupille fendu	Splint	chaveta
counterweight	contrepoids	Gegengewicht	contrapeso
coupler	raccord	Anschlussstück, Schnellwechsler	conector, enganche
coupling	accouplement	Verbindungsstück	acoplamiento
cover	couvercle	Deckel	cubierta, tapa
crankcase	carter moteur	Kurbelgehäuse	cárter
crankshaft	vilebrequin	Kurbelwelle	cigüeñal
crosshead	traverse	Kreuzkoph	cruceta
cup	coupelle	Aussenring, Schale	taza

Copyright © 2006 Terramite Corporation

Courtesy of Machine.Market

Translation Chart (Continued)

ENGLISH	FRANÇAIS	DEUTSCH	ESPAÑOL
cushion	coussin	Dämpfungselement, Sitzpolster, Vollgummi	amortiguador
cylinder	cylindre	Zylinder	cilindro
cylinder block	bloc-cylindres	Motorblock, Zylinder-block	bloque de motor
decal	décalque, décalcomanie	Abziebild, Beschriftung	calcomania
detachable	amovible	abnehmbar, geteilt	separable
differential	différentiel	Differential	diferencial
diode	diode	Diode	diodo
dipstick	jauge baïonnette	Messstab	varilla medidora
direction switch	inverseur de marche	Richtungsschalter	interruptor de direccion
directional	de sens de marche	richtungsabhängig	sentido de marcha
disc	disque	Scheibe	disco
distributor	allumeur	Verteiler, Zündverteiler	distribuidor
divider	diviseur, répartiteur	Teller, Verteiler	divisor
dowel	goujon	Passstift, Haltestift	espiga
drive axle	essieu moteur	Antriebsachse	eje motriz
drum	tambour	Trommel	tambor
dual	jamelé, double	doppelt, zweifach	doble
elbow	coude	Kniestück, Winkelstück	codo
element	élément	Element, Einsatz	elemento
enclosure	carter, carénage	Umrandung, Gehäuse	compartimiento
end	terminal, extrémité	Ende	extremo
engine	moteur	Motor	motor
exhaust	échappement	Auspuff	escape
extension	prolongement, rollonge	Verläagerung	extensión
exhaust valve	souparpe d'échappement	Auspuff-, Auslassventil	válvula de escape
fan	ventilateur	Lüfter	ventilador
felt	feutre	Filz	anillo de retén
fender	aile, pare-boue	Schutzblech, Kofflügel	guardabarros
film	film, autocollant	Aufkleber	pelicula
filter	filtre	Filter	filtro
fitting	graisseur, raccord	Nippel, Schraubverbindung	acoplamiento
flap	rabat, bavette	Felgenrand, Klappe	pestaña
flasher	clignotant	Blinkgeber	contacto intermitente
flash lamp	ampoule de clignotant	Blinkleuchte	bombilla intermitente
float	flotteur	gleiten, schwimmen	flotador
floor	sol, plancher	Boden	piso
flow	débit, courant, flux	Strömung, Durchfluss	flujo
flywheel	volant (moteur)	Schwungscheibe	volante
flow protector	protecteur de débit	Durchfluss-Schutzvorrichtung	protector de flujo
foot	pied	Fuss	pie
fork	fourche	Gabel	horquilla
forward	en avant	vorwärts	adelante, hacia adelante
frame	châssis	Rahmen	bastidor
front	avant	vorne, Front	frente, parte delantera
fuel	carburant	Kraftstoff	combustible
FFTL	triple levée	Dreifach-Vollfreihub	alto despejo libre
fuse	fusible	Sicherung	fusible
gasket	joint	Dichtung	junta

Copyright © 2006 Terramite Corporation

Courtesy of Machine.Market

Translation Chart (Continued)

ENGLISH	FRANÇAIS	DEUTSCH	ESPAÑOL
guage	jauge	Anzeiger	medidor, indicador, calibrador
gear	pignon, engrenage	Zahnrad, Gang	engranaje
glow plug	bougie de préchauffage	Glühkerze	bujía incandescente
grommet	virole	Tülle, Dichtungsring	arandela aislante
group	ensemble	Gruppe, Satz	grupo
guard	protecteur	Schutz, Abdeckung	protector
guide	guide	Führung	guía
hand brake	frein à main	Handbremse	freno de emergencia
handle	poignée	Griff, Handgriff	asa
harness	faisceau	Kabelbaum, Verdrahtung	mazo de cables
head	téte	Kopf	culata
head lamp	phare AV	Scheinwerfer	luz delantera
height	hauteur	Höhe	altura
hinge	charnière	Gelenk, Scharnier	bisagra
hold down	tendeur	Aufspannvorrichtung	sujetador
holder	support	Halter	soporte
hood	capot	Motorhaube	capó
hook	crochet	Zughaken	gancho
horn	avertisseur	Hupe, Signalhorn	bocina
hose	durite, flexible	Schlauch	manguera
housing	boîtier, carter	Gehäuse	caja
hub	moyeu	Nabe, Radnabe	maza
hydraulic	hydraulique	Hydraulik	hidráulico
ignition	allumage	Zündung	encendido
indicator	indicateur	Anzeigevorrichtung	indicador
injection	injection	Einspritzung	inyección
injector	injecteur	Einspritzventil	inyector
inner	intérieur	innen	interior
insert	pièce rapportée	Einsatz	inserto
instrument	instrument	Instrument	instrumento
insulation	isolation	Isolierung	aislante
insulator	isolateur	Isolator, Nichtleiter	aislador
intake valve	soupape d'admission	Ansaugventil	válvula de admisión, válvula de aapiración
interface	surface de réparation, interface	Übertragungseinheit	entrecara, zona Interfacial
jacket	chemise, jupe	Mantel, Wärmeisolierung	camisa, chaqueta
intermediate	intermédiaire, moyen	indirekt	intermedio, medianero
joint	joint	Gelenk, Verbindung	junta, unión, juntaura
keeper	détente	Gegenmutter, Halter	tirante, fijader, retentór
key	clé, clavette	Schlüssel, Keil	llave
lever	levier	Hebel	palanca
leveler	niveleur, correcteur	Planierer	nivelador
light	lumière	Leuchte	luz
line	canalisation	Leitung	tuberia
liner	chemise, garniture	Laufbuchse	camisa
lining	revêtement, garniture (frein)	Auskleidung, Belag	revestimiento, forro
link	baillette, maillon	Glied, Gelenkstück	eslabón
locknut	contre-écrou	Kontermutter, Siche-rungsmutter	tuerca de traba

Copyright © 2006 Terramite Corporation

Courtesy of Machine.Market

Translation Chart (Continued

ENGLISH	FRANÇAIS	DEUTSCH	ESPAÑOL
lockwasher	rondelle d'arrêt	Federring	arandela de seguridad
magnet	aimant	Magnet	imán
manifold	collecteur	Krümmer	múltiple
master cylinder	maître-cylindre	Hauptzylinder	cilindro maestro
maximum	maximum	maximal	máximo
meter	instrument, mètre	Messgerät	medidor, dosificador
modulating	de modulation	Modulation	modulador
motor	moteur	Motor, elektr.	motor
mount	support	anbauen, montieren	montar
mounting	montage	Befestigung, Anbausatz	montaje
muffler	silencieux d'échappement	Schaildämpfer	silenciador
nipple	graisseur	Schmiernippel	boquilla
nut	écrou	Mutter	tuerca
oil	huile	Öl	aceite
oil level	niveau d'huile	Ölstand	nivel del aceite
outer	extérieur	aussen	exterior
oil filter	filtre à huile	Ölfilter	filtro de aceite
O-ring	joint torique	O-Ring	sello anular
oversize	surdimensionné, majoré	Übermass, Übergrösse	sobremedida
packing	gerniture d'étanchéité	Abdichtung	empaquetadura
pad	tampon, coussin	Polster, Unterlagsblock	almohadilla
pan	carter, cuvette	Ölwanne	colector del cárter
panel	tableau	Verkleidungsblech, Instrumentenbrett	panel, tablero de instrumentos
pedal	pédale	Pedal	pedal
pin	goupille, axe	Bolzen, Stift	pasador
pinion	pignon	Ritzel	piñón
piston	piston	Kolben	pistón
pivot	pivot	Anlenk-, Drehpunkt, Auf-	pivote
		hängung	
plate	plaque, plateau	Platte, Blech	placa, plancha
plug	bouchon	Schraubstopfen	tapón, bujia
plunger	plongeur	Tauch-, Ventilkolben	émbolo
polished	poli	poliert	pulido
precleaner	préfiltre	Vorreiniger	antefiltro
primary	primarire	Haupt-, Vor-, primär	primario
priority	priorité, séquence	Sicherheits-, Vorrang	prioridad
protector	protecteur	Schutzvorrichtung	protector
pulley	pulie	Riemenscheibe	polea
pump	pompe	Pumpe	bomba
push rod	poussoir	Schubstange	varilla de empuje
race	chemin de roulement, cuvette	Lager-, Laufring	anillo de cojinete
radiator	radiateur	Kühlernetz	radiador
rail	rail (glissiére)	Schiene	riel, mástil
rear	arrière, AR	rückwärts, hinten	posterior, trasero
rectifier	redresseur	Gleichrichter	rectificador
regulator	régulateur	Regler, Reguliervorrichtung	regulador
relay	relais	Relais	relé
relief valve	soupape de décharge	Überdruckventil	válvula de alivio

Copyright © 2006 Terramite Corporation

Courtesy of Machine.Market

Translation Chart (Continued)

ENGLISH	FRANÇAIS	DEUTSCH	ESPAÑOL
repair	réparation	Reparatur	reparación
required (Reqd.)	requis	erforderlich	requerido
reservoir	réservoir	Tank	depósito, tanque
retainer	arrètoir	Halterung	retén
reverse	marche AR	Rückwärsgang	marcha atrás, reverso
right hand (RH)	côté droit, à droit	rechts	lado derecho (L.D.)
ring	anneau, joint	Ring	anillo, aro, argolla
rivet	rivet	Niete	remache
rocker arm	culbuteur	Kipphebel	balancin
rod	bielle	Stange, Pleuelstange	varilla
roller	galet	Laufrolle	rodillo
rotor	rotor	Rotor, Laufrad	rotador, rotor, rodete
seal	joint	Dichtring	sello
seal-o-ring	joint torique	O-Ring-Dichtung	anillo, anillo de estancamiento
sealant	produit d'étanchéité	Dichtungsmittel	sellante, sellador
seal-u-cup	joint en demi-lune	U-Profil-Dichttungsring	copa en "U"
seat	siège	Sitz	asiento
secondary	secondaire	Anbau-, Hilfs-, Sekundär	secundario, auxiliar
sender	emetteur, sonde	Geber (Kraftstoffstand)	sensor
sending unit	émetteur	Messwertgeber	unidad sensora
separator	séparateur	Separator, Abscheider	separador
setscrew	vis de fixation	Gewindestift	tornillo de traba, tornillo prisionero
shaft	arbre, axe	Welle	eje, mango largo, rastágo
shield	bouclier, écran de protection	Abdeckung, Schild	protector
shim	cale de réglage	Beilagscheibe	calce
short block	bloc-moteur nu	Teil-, Skelettmotor	bloque de motor sin accesoriso, bloque parcial
shroud	panneau, plaque	Abdeckplatte	cubierta, refuerzo de ventilador
sideshift	déport latéral	Seitenschubvorrichtung	desplazador lateral
sleeve	manchon, chemise	Büchse, Hülse	manguito
snap	jonc d'arrêt	Sprengring	anillo de presión, cierre de resorte
socket	douille, chape	Fassung	enchufe
solenoid	solénoïde	Magnetspule	solendoide
spacer	entretoise	Distanzstück	espaciador
spark plug	bougie d'allumage	Zündkerze	bujía
spider	croisilon	Gelenkkreuz	cruceta
spindle	pivot, fusée, broche	Spindel, Achszapfen	punta de eje
spool	tiroir	Ventilstössel	carrete
springs	ressort	Feder	resortes
sprocket	barbotin	Antriebsrad	rueda dentada
standard (Std.)	normal	Standard	estándar
starter	démarreur	Anlasser	arranque
stationary (Stat.)	stationnaire	Aussenmast, stationär	estacionario, inmóvil
stator	stator	Ständer, Stator	estator
steering	directon	Lenkung	directción

Copyright © 2006 Terramite Corporation

Courtesy of Machine.Market

Translation Chart (Continued)

ENGLISH	FRANÇAIS	DEUTSCH	ESPAÑOL
stem	tige	Schaft	vóstago
strainer	filtre, crépine	Sieb	filtro
strap	sangle	Riemen, Gurt	banda, correa
strut	étai, tirant	Strebe	tirante de dirección
stud	goujon, tenon	Stehbolzen	espárrago
support	support	Auflager, Abstützung	soporte
switch	interrupteur	Schalter	interruptor
tag	étiquette	Anhänger	etiqueta
tapered	conique	konisch, kegelförmig, verjüngt	perfil cónico, aguzado
tappet	poussoir	Anschlag, Stössel	levantaválvulas
tee	té	T-Stück	conexión "T"
terminal	borne	Anschlussklemme	terminal
thermistor	thermistor	Thermistor, Temperatur-fühler	termistor
thermostat	thermostat	Thermostat	termostato
tightner	tendeur	Spanner	tensor, adjustador
tilt cylinder	vérin d'inclinaison	Neigezylinder	cilindro de inclinación
tire	pneumatique	Reifen	neumático
transfer	déclacomanie, autocollant	Abziehbild	transferencia
transmission	transmission, boîte de vi-tesses	Getriebe	transmisión
tread-step	marchepied	Triffstufe	estribo antirresbalante
tube	tuyau, tube, gicleur	Rohr, Schlauch	tubo
tubing	canalisations	Rohr, Schlauchleitung	tuberias, tubos
undersize	sous-dimensionne, minore	Untermass	bajomedida
union	raccord	Anschiussstück, Verbinaung	unión
universal joint	cardan	Kreuzgelenk	junta universal
upright	montant	senkrecht, Hubgerüst	montante vertical
valve	soupape, clapet	Ventil	válvula
valve mechanism	culbuterie	Ventilsteuerung	mecanismo de válvulas
vacuum	vide, dépression	Vakuum, Unterdruck	vacio, vacuómetro
washer	rondelle	Unterlegscheibe	aradela
water	eau	Wasser	agua
water pump	pompe à eau	Wasserpumpe	bomba de agua
wear strip	bande d'usure	Verschleissstreifen	plancha de desgaste
wheel	roue	Rad	rueda
wheel cylinder	cylindre de roue	Radbremszylinder	cilindro de rueda
wiper	racleur	Wischer, Abstreifer	limpiaparabrisas
wire	fil	Draht, Leitung	alambre, cable
wire harness	faisceau de fils	Kabelbaum	mazo de cables
wire marker	marquer de fil	Kabelmarkierung	marcador de alambre
worm	vis sans fin	Schnecke	tornillo sin fin
wrap	revêtement, enveloppe	Hülle	envolver, envoltura
yoke	chape	Gabelgelenk, Joch	horquilla

Copyright © 2006 Terramite Corporation

Courtesy of Machine.Market

INDEX

A

Adapter Assembly with Power Steering 2.11
Adapter Assembly without Power Steering 2.11
Alarm, Back-up 5.10
Alignment Pin (Needle Brg.) (9) 3.23
Arm Cylinder 3.3, 3.22
ASCO Fuel Shutoff Valve 3.11
ASCO Fuel Shutoff Valve Assembly 3.11
Auger, 12" diameter 5.8
Auger, 15" diameter 5.8
Auger, 6" diameter 5.8
Auger, 9" diameter 5.8
Auxillary P.T.O. Kit 2.7
Axle Pin 3.3
Axle Pin, 11/4" 3.3
Axle Weldment 3.3

B

48" Loader Bucket 3.3
56" Loader Bucket 3.3
Back-up Alarm Kit 5.10
Back Up Washer 2.11
Backplate Assembly 2.8
Backplate Assy., Cessna, without Power Steering 2.11
Backplate Assy., Eaton, with Power Steering 2.11
Backplate Assy., w/valve plate, Eaton 2.11
Baffle-Pinion Bearing 3.20
Ball 9/32 inch (22mm) 3.23
Ball 2.11
Ball-7/32 inch (6mm) dia. 3.23
Battery 3.9, 3.11
Bearing Assembly 3.21
Bearing Block 2.9
Bearing Race 2.11
Bearing Seal 3.12
Bearing 2.11
Bearing, Inner After 6-96 ..... 3.12
Bearing, Inner Before 6-96 ..... 3.12
Bearing, Outer After 6-96 ..... 3.12
Bearing, Outer Before 6-96 ..... 3.12
Bearing, Thrust 3.3, 2.11
Blade/w - 4 in 1 Clam 5.3
Blade, Landscape, Quick Attach 5.7
Bolt 3.14
Bolt, 1/2" x 11/4" 3.5
Bolt-Break Mounting 3.21
Bolt-Carrier Cover 3.21
Bolt-Differential Bearing Cap 3.21
Bolt-Drive Gear 3.21
Bolt-Parking Brake Assembly 3.16
Bolt, 1/4" x 3/4" LG 5.3
Bolt-Wheel 3.21
Boom Assembly 3.19
Boom Bushings 3.19
Boom Cylinder 3.19
Bracket, Battery 3.11
Bracket, Hose, Post Drill 5.8
Brake Band 3.14
Brake Cable 3.14
Brake Drum 3.16
Brake Lever, Adjustable 3.5
Brake Off Set Link 3.14
Bucket, 10", Quick Attach 5.7
Bucket, 12", Quick Attach 5.7
Bucket, 16", Quick Attach 5.7
Bucket, 18", Quick Attach 5.7
Bucket, 20", Quick Attach 5.7
Bucket, 24", Quick Attach 5.7
Bucket, 36", Quick Attach 5.7
Bucket, 38", Quick Attach 5.7
Bucket, 8", Quick Attach 5.7
Bucket, Loader, Flat Bottom, 56" 5.7
Bucket, 16”, Standard 3.17
Bucket, 48" and 56" Loader 2.5
Bumper 3.3
Bushing 3.14, 3.19
Bushing Spindle 3.3

C

Cable, Battery to Ground 7" 3.11
Cable, Battery to Solenoid 48" 3.9, 3.11
Camplate, For Cessna Trans. 2.11
Camplate, For Eaton Trans. 2.11
Canopy, Fiberglass Only (resale) 5.2
Canopy w/Hardware 5.2
Cap Screw 2.11, 2.8
Cap, Hyd. Breather Filter w/Dipstick 3.5
Cap, Steering Wheel 3.5
Cap-Differential Bearing 3.21
Case-Differential 3.21
Castle Nut 3.3
Center Assembly, Quick Attach 3.17
Chain, 5/16 proof coil 5.8
Chain Hook Bracket 5.8
Check Valve Assembly 2.11
Choke Cable 3.11
Clam/w - 4 in 1 ..... 5.3
Clamp, Fuel Hose 3.7
Clip-Differential Clutch Retainer 3.21
Commutator Cover 2.15
Commutator Ring 2.15
Commutator 2.15
Companion Flange Assembly 3.21
Cotter Pin 3.1, 3.9, 3.11, 3.12, 3.19
Coupler 2.11
Coupling Shaft 3.7

Copyright © 2006 Terramite Corporation

Courtesy of Machine.Market

INDEX (Continued)

Cover Plate 2.11
Cover-Carrier 3.21
Crowd Cylinder 3.19
Cutting Edge (Weld On) 2.3
Cylinder/A, Clam Bucket 5.3
Cylinder Assembly, Swing W/Tee Fitting 3.19

D

Decal Plate, Since 1965 ..... 3.25
Decal Plate, Warning, Serial Number, etc 3.25
Decal Plate, Warning, SN., etc. 3.25
Decal, American Flag 3.24
Decal, Danger, Crush Hazard 3.24, 3.26
Decal, Diesel Only 3.25
Decal, Digging Depth 8’4" 3.24
Decal, Gas Only 3.25
Decal, Instrument Panel 3.25
Decal, Large Terramite 3.24
Decal, Maintenance 3.26
Decal, Notice Starting Procedure 3.25
Decal, Parking Brake 3.25
Decal, Plate ROPS T5&T6 Series 3.24
Decal, Plate, Since 1965 ..... 3.25
Decal, Read Owners Manual 3.26
Decal, Small Terramite 3.24
Decal, Stand Clear 3.24
Decal, T5C 3.24
Decal, Warning Call Before You Dig 3.25
Decal, West Virginia 3.24
Decal, Wobblestick & Operator Hazard 3.26
Deck Center 3.5
Diesel Installation Kit 5.8
Diggerhead, 810 "M" Series 5.8
Dipstick Assembly 3.17
Dipstick for Linkage Type Only 3.17
Dipstick T5 and T5B Older Style 3.5
Disc-Differential 3.21
Distributor Block 2.2
Drive Gear Assembly 2.8
Drive Motor Flange 3.14, 3.16
Drive Motor 3.14
Drive Shaft Coupler 3.7
Drive Shaft Coupling 3.27
Drive Shaft 2.11
Drive Shaft Splined L3 Tooth 3.7
Drive Shaft Assy., Splined 3.7
Dust Cap-Female 2.7
Dust Plug-Male 2.7
Dust Cap 3.12, 3.13

E

Edge, Cutting, Bolt-On, 56" w/Bolts 5.7
Edge, Cutting, Serrated, 56" w/Bolts 5.7
End Yoke Assembly 3.20

F

1/4" Fuel Filter 3.7
4-Way, 3-Position Valve Section 2.20
5/16" Fuel Filter 3.7
Face Seal 2.16
Filter Base 2.4
Filter, Hydraulic 3.5
Filter, Strainer (Inside Tank) 2.4
Filter, Strainer 2.4
Fitting - 1/4" Male to 45°, 1/4" Female Swivel 5.5
Fitting - 1/4" Straight Male to 1/4" Female Swivel 5.5
Fitting, 1/2 "M 90° x 1/4 "M Swivel 5.4
Fitting, #10 x 1/2" x 90° 2.6
Fitting, #12 x 1/2" x 90°, Trans. 2.4
Fitting, #12 x 8" adaptor 2.6
Fitting, #8 x 1/2" x 45° 2.6
Fitting, #8 x 6" adaptor 2.6
Fitting, 1/2" x 1/4" x 90°, Loader Valve 3.9, 3.11
Fitting, 1/2" x 90°, Loader Valve 3.9, 3.11
Fitting, 1/2" x 3/8", Trans. 2.4
Fitting, 1/4" (front hose set) 2.2
Fitting, 1/4" Tee (front hose set) 2.2
Fitting, 1/4" x 45° (front hose set) 2.2
Fitting, 1/4" x 45° 2.2
Fitting, 1/4" x 90° (front hose set) 2.2
Fitting, 1/4" 3.19
Fitting, 1/4", Hydraulic Hose 2.8
Fitting, 11/16" x 3/4", Trans. 2.4
Fitting, 3/4" x 1/4" x 45° 2.6
Fitting, Bottom Type 1/4" 2.4
Fitting, Fuel Tank 3.5
Fitting, Restrictor 2.6
Fitting, Straight 1/4" Swivel 2.2
Fitting,Grease 3.9, 3.11
Fittings, 1/2" x 90° 2.3
Flip Over Pad 5.6
Foot Pedal Control 3.5
Foot Pedal 3.5
Front Curl Cylinder 3.3
Front Curl Rod 3.3
Front Tire 5.1
Front Tube 3.13
Fuel Cap, Safety 3.3
Fuel Hose 1/4" 3.7
Fuel Hose 5/16" 3.7
New Fitting, 1/4" 2.2

G

Gasket, Relief Body 2.11
Gasket-Carrier Cover 3.21
Gear & Pinion Ass’y-Drive 3.20
Gear Pump Part # 66034 ..... 2.8

Copyright © 2006 Terramite Corporation

Courtesy of Machine.Market

INDEX

Gear Pump 2.8
Gear-Differential 3.21
Grill Assembly 3.3
Guide w/Hose 5.3
Guide, Spring 2.11
Housing, Gasket 2.11

H

1/4" Fuel Hose 3.7
5/16" Fuel Hose 3.7
Clamp, Fuel Hose 3.7
Clamp, Hose 3.7
Handle 3.1
Handle Assembly 3.1
Handle, Loader Wobblestick 3.11
Handle, Loader, Black 5.5
Handle, Wobblestick, Left Rear 2.6
Handle, Wobblestick, Right Rear 2.6
Headlamp Assembly 3.5
Headlight Switch/Toggle 3.5
HF Rear Tire 5.1
Holder, Fuse, 20 AMP, ATO 3.11
Hood Assembly w/Decals 3.4
Hood, Hinge, Bushing 3.5
Hood Prop Bolt 3.7
Honda 20 HP, Wiring Diagram 4.4, 4.5, 4.6, 4.7, 4.8, 4.9
Hose, 1/2" x 115" 2.14
Hose, 1/2" x 20 ..... 2.4
Hose, 1/4 " x 104" 5.4
Hose/A - 1/4" Male Pipe Ends 102" Lg. 5.5
Hose/A - 1/4" Male Pipe Ends 18" Lg. 5.5
Hose/A - 1/4" Male Pipe Ends 36" Lg. 5.5
Hose 1/2" x 57" (back valve section) 2.14
Hose, 1/2" x 35", Loader Valve 3.9, 3.11
Hose, 1/2" x 36"(back valve section) 2.12
Hose, 1/2" x 78"(back valve section) 2.14
Hose, 1/2" x 20", Trans. 2.4
Hose, 1/4" Swing Crossover, 15" 2.14, 3.19
Hose, 1/4" Swing to Valve, 20" 2.14, 3.19
Hose, 1/4" Swing to Valve, 25" 2.14, 3.19
Hose, 1/4" x 131" 2.14, 3.19
Hose, 1/4" x 18" (front hose set) 2.13
Hose, 1/4" x 34" (front hose set) 2.13
Hose, 1/4" x 34", Arm Cylinder 2.13
Hose, 1/4" x 36", Power Steering 2.12
Hose, 1/4" x 62" (front hose set) 2.13
Hose, 1/4" x 62", Loader Valve 3.9, 3.11
Hose, 1/4" x 63" (front hose set) 2.13
Hose, 1/4" x 63", Loader Valve 3.9, 3.11
Hose, 1/4" x 66" (front hose set) 2.13
Hose, 1/4" x 66" 3.19
Hose, 1/4" x 66", Loader Valve 3.9, 3.11
Hose, 1/4" x 83" (front hose set) 2.13
Hose, 1/4" x 83", Loader Valve 3.9, 3.11
Hose, 1/4" x 92" 3.19
Hose, 3/4" x 12"(back valve section) 2.12
Hose, 3/4" x 12", Trans. 2.4
Hose, 3/8" x 20"(back valve section) 2.12
Hourmeter (view from back) 3.11
Hourmeter 3.4, 3.5
Housing Assembly 2.11
Housing 2.11
Housing, Gasket 3.3
Housing-Axle 3.20
Hub, 5 on 4 after 6-1-96 ..... 3.12
Hub, previous to 6-1-96 ..... 3.12
Hydraulic Main Power Circuit 2.12
Hydraulic Tank 2.12, 3.5
Hydrostatic Transmission 2.10, 2.11

I

Idler Gear Assembly 2.8
Ignition Switch w/Key 3.5
Inner Race 2.11
Input Shaft/Wheel Tube 3.21
Installation Kit 5.8
Insulator, Black 3.11
Insulator, Red 3.9, 3.11

K

Key 3.16
Keyway 2.11
Kit-Differential Bearing 3.21
Kit-Inner Pinion Bearing 3.20
Kit-Outer Pinion Bearing 3.20
Knob 2.6
Knob, Valve, Hydraulics, Auger 5.9
Kohler Comm. 20/ 25 HP -Wiring Diagram 4.2, 4.3
Kohler 20 HP Engine Muffler 3.7

L

L Link 3.11
Light, Flood, Rect. 5.2
Linkage Assembly, Center 3.17
Linkage Link, Left 3.17
Linkage Link, Right 3.17
Linkage 3.9, 3.11, 3.17
Linkage Valve Kit 3.9, 3.11
Load Check Plug Assembly 2.21
Loader Arm Assembly (resale) 3.3
Loader Circuit 2.13
Loader Circuit Relief Valve 2.21
Loader Valve 2.19
Loader Valve Hoses and Fittings 2.3
Lock-Differential Shaft 3.21

Copyright © 2006 Terramite Corporation

Courtesy of Machine.Market

INDEX (Continued)

M

MAB/MAE Torquemotor Exploded Assey View - Typic ... 2.15
Magnalloy Style Coupling ... 3.27
Main Relief Rear Valve ... 2.5
Manifold ... 2.15
Manual Box ... 3.1
Metric Fasteners ... 3.23
Model J-HP High Pressure Relief ... 2.11
Molded O-Ring ... 2.11

N

Nut, 3/8" - 16NC Flange ... 3.3
Nut, 3/8" NC Flange Z ... 3.19
Nut ... 3.12, 3.14
Nut, 1/2" NC Lock ... 3.19
Nut, 1/2" NF Jam ... 3.3
Nut, 3/8" NC ... 3.13
Nut, 3/8" NC Flange Z ... 3.11
Nut, 3/8" 24" NF Lug ... 3.11
Nut, 5/8" NF Jam ... 3.3
Nut, 5/16" NF Jam ... 3.9, 3.11
Nut, 1" NFZ Jam ... 3.1
Nut, Brake Mounting ... 3.21
Nut, Acorn Cap ... 2.11
Nut, Headlamp ... 3.5
Nut, Jam, Adjusting Screw ... 2.11
Nut, Lug ... 3.13
Nut-Parking Brake Assembly ... 3.16
Nut-Pinion ... 3.21

O

Oil Change and Type Specifications ... 2.1
O-Ring 1/16" x 3" ... 2.8
O-Ring 33/32" x 7/8" ID, Back Plate ... 2.11
O-Ring, 1/16" x 3/8" ... 2.11
O-Ring, 1/16" x 31/4" ... 2.11
O-Ring, 3/32" x 15/16", Outer Pintle ... 2.11
O-Ring, 33/32" x 41/64" ... 2.11
O-Ring, 33/32" x 7/8" ... 2.11
O-Ring, Adjusting Screw ... 2.11
O-Ring, Molded ... 2.11
O-Ring, Outer Pintle ... 2.11
O-Ring, Valve Seat ... 2.11
Outrigger,Guard ... 3.18, 3.19
Outrigger T5C, Handle ... 2.5
Outrigger Assembly 4 Lug ... 3.18, 3.19
Outrigger Assembly 5 Lug ... 3.18, 3.19
Outrigger Assembly before 3-3-99 ... 3.18, 3.19
Outrigger Cylinder after 3-3-99 ... 3.18, 3.19
Outrigger Guard ... 3.19
Outrigger Guard with pin ... 3.18, 3.19

P

P.T.O. Depress Lever ... 2.7
Pedal Block ... 3.5
Pedal Shaft ... 3.5
Pedal Spring ... 3.5
Pedal Stop Bolt ... 3.5
Pillow Block Bearing ... 3.5
Pin, 6 1/2", Rear Curl Cylinder to Quick Attach ... 3.17
Pin, 7 5/8", Dipstick to Linkage ... 3.17
Pin, 8 1/2", Quick Attach Pull ... 3.17
Pin, 8 1/4", Quick Attach Bucket ... 3.17
Pin/w - Bucket to Loader Arms ... 5.3
Pin/w - Clam Cylinder (Barrel End) ... 5.3
Pin/w - Clam Cylinder (Rod End) ... 5.3
Pin/w - Front Curl Cylinder (Rod) ... 5.3
Pin 1" x 6 7/8",Loader Arm ... 3.3
Pin, 1" x 4" ... 3.3
Pin, 1" x 41/8" ... 3.3
Pin, 1" x 43/4" Loader Bucket ... 3.3
Pin, 1" x 51/4", Arm Cylinder ... 3.3
Pin, 1" x 51/4", Front Curl Cylinder ... 3.3
Pin, 1" x 51/4", Front Curl Cylinder ... 3.3
Pin, 1" x 61/4" ... 3.19
Pin, 1" x 67/8" ... 3.19
Pin, 1" x 67/8", Loader Arm ... 3.3
Pin, 1" x 73/4" ... 3.19
Pin, 1" x 77/8", Arm Cylinder Rod ... 3.3
Pin, 11/4" x 71/2" ... 3.17
Pin, 11/4" x 71/4" ... 3.19
Pin, 11/4"x 81/4" ... 3.17
Pin, Main Swing ... 3.19
Pin, Tooth after 1-90 ... 3.17
Pinion - Differential ... 3.21
Plastic Disc ... 3.1
Plate - Differential ... 3.21
Plug Cover ... 3.21
Port Relief 2000# ... 2.5
Port Relief 2600# ... 2.5
Power Steering Gear ... 3.5

Q

Q.A. Plug ... 2.7
Quick Attach Backhoe Buckets ... 5.7
Quick Attach Fitting ... 2.7

R

Race, Inner After 6-96 ... 3.12
Race, Outer & Inner Before 6-96 ... 3.12
Rear Axle ... 3.16
Rear Axle - Parking Brake Assembly ... 3.16
Rear Bucket ... 3.19

Copyright © 2006 Terramite Corporation

Courtesy of Machine.Market

INDEX

Rear Curl Cylinder For Linkage Type T5C/T7 ..... 3.19
Rear Tube 3.13
Rear Valve & Assembly 2.6
Reflector, Amber 5.2
Reflector, Red 3.19, 5.2
Relief Valve, Loader 3.11
Retainer - Oil Seal 3.21
Rim, Front & Rear 3.13
Ring - Snap 3.21
Ring - Wheel Bearing Retaining 3.21
Ripper, Quick Attach 5.7
Rod , Swing Cylinder 3.19
Rod , Swing Cylinder Boss Only 3.19
Rod, Arm Cylinder 2.9
Rod, Boom Cylinder 3.19
Rod, Crowd Cyl. 3.19
Rod, F. Curl 2.9
Rod, Power Steering 2.9
Rod, Rear Curl Link 3.19
Rod, Swing Cylinder 3.19

S

Screw, Set 3.3
Seal After 6-96 ..... 3.12
Seal Before 6-96 ..... 3.12
Seal Pinion 3.20
Seal Shaft 3.21
Seat 3.1
Seat Assembly 3.1
Seat Assembly, Swivel 3.1
Seat Bearing 3.1
Seat Belt Assembly 3.1
Seat Cushion, Back & Bottom 3.1
Single Pole Toggle Switch 3.11
Shim 3.20
Skid Steer Tires 5.1
Slinger - Pinion Bearing Outer 3.20
Softrac Rear Tire 5.1
Spacer - Differential Gear 3.21
Spindle, L 3.3
Spindle, Left, 13/4" 3.3
Spindle, R 3.3
Spindle, Right, 13/4" 3.3
Spring 3.1
Spring Centering Bolt 3.5
Spring Bracket, Parking Brake 3.15
Spring Retro Fit Parking Brake 3.15
Std. Front Tire 3.13, 5.1
Std. Rear Tire 3.13, 5.1
Steering Cylinder 3.5
Steering Gear, Power 3.5
Steering Wheel 3.5
Strap - Hose Guide 5.3
Street & Cleat Pad Kit, Detachable 5.6
Street Pad, Detachable 5.6
Strobe Light 5.2
Swing Assembly 3.19
Swing Pin, Main - Below Rear Valve 3.19
Swing Stop 3.19
Switch, Back-up Alarm 5.10

T

T-Handle 13012 or 13013 ..... 3.5
Tank, Fuel 3.3
Tank, Hydraulic, T5 ..... 3.5
Threaded Q.A. Plug 2.7
Throttle Cable 3.5, 3.7
Throttle Cable, Gas 3.5
Thrust Washer 3.21
Tie Rod 3.3
Tie Rod End 3.3
Tiger Tooth 5.6
Tire Valve 3.13
Tire, 20.5 x 8 x 10 ..... 3.13
Toggle Switch Back Boot Cover 3.11
Tooth Cap Fits Machines built from 2-87 to 12-89 ..... 5.6
Tooth Cap 65-2-87 ..... 5.6
Tooth Caps Fits machines built after 1-90 ..... 3.17, 5.6
Tooth Shank (Weld On) 3.17
Torquemotor 2.4
Transmission Assembly 2.4

U

UCC Sleeve Coupling 3.7
UCC Style Coupling T5-T5B 3.27
Update Kit for Older Seats (Prior to 7-1-96) 3.1

V

Valve Boot Spool Protector 2.5
Valve Link 3.11
Valve, Hydraulic, Auger 5.9
Valve, Loader, 3 Spool 5.4
Valve, Loader (with or without fittings) 3.11

W

Washer 3.1, 3.12, 3.19, 3.21
Washers 3.3
Wobblestick Handle, Loader 3.5
Wobblestick Hinge Bolt 3.9, 3.11
Wobblestick Hinge Bolt Support 3.9, 3.11
Wobblestick Knob 3.5
Wobblestick Pivot Block, Front 3.9, 3.11
Wobblestick Pivot Block, Universal 2.5
Work Lights, Front and Back Mount 5.2

Copyright © 2006 Terramite Corporation

Courtesy of Machine.Market

SAMPLE Limited New Product Warranty

WE WARRANTY TO THE ORIGINAL CONSUMER/ PURCHASER THAT EACH NEW PRODUCT SOLD BY US WILL BE FREE FROM MANUFACTURING DEFECTS IN NORMAL SERVICE USE FOR A PERIOD OF ONE (1) YEAR FROM DATE OF PURCHASE.

Our obligation under this warranty is expressly limited, solely at our option, to the replacement or repair at the premises of Terramite Corporation, 600 Goff Mountain Road, Charleston, West Virginia 25356, or at a service facility designated by us, of such part or parts as inspection shall disclose to have been defective. This warranty does not apply to defects caused by casualty or unreasonable use (including faulty repairs by others and failure to provide reasonable and necessary maintenance) nor to ordinary wear and tear, while in the possession of the consumer/purchaser.

This warranty is for replacement or repair of defective parts only, and does not provide for replacement of complete products due to a defective part or parts nor does it cover any charges of whatever kind in connection with the replacement of any such defective parts.

We shall not be responsible for special, indirect, incidental or consequential damages of any kind including, but not limited to, labor costs or transportation charges in connection with the replacement or repair of defective parts.

Components such as engines, pumps and batteries which are supplied by other manufacturers, are warranted by the manufacturer's nearest "Factory Service Center" for repair or replacement of those items. However, when necessary, the manufacturer will act as your agent to secure adjustment.

To obtain warranty service, purchaser must bring the product to an authorized Terramite Service facility. For the facility nearest you, contact Terramite Corporation, P.O. Box 7146, Charleston, WV 25356 or telephone (304) 776-4231.

This warranty gives you specific rights and you may have other rights which vary from state to state. This warranty is in lieu of any other warranty, whether written, verbal, expressed or implied and may not be modified or changed by Terramite Distributors or Dealers. This warranty shall be null and void unless the section below has been filled in and the manufacturer's copy of this document is returned to Terramite Corporation, P.O. Box 7146, Charleston, WV 25356 within ten (10) days of the date of purchase by the original owner.

MODEL# _____ SERIAL# _____ ENGINE# _____

PURCHASED FROM _____ CERTIFICATE OF ORIGIN# _____

NAME OF PURCHASER _____

ADDRESS _____

PHONE (_____) _____ CERTIFICATE OF ORIGIN# _____

TYPE OF BUSINESS _____

IS THIS YOUR FIRST TERRAMITE? _____

WHAT KIND OF SIMILAR EQUIPMENT DO YOU OWN? _____

_____

_____

OPTIONS _____

_____

DATE OF PURCHASE _____ SIGNATURE _____

(ORIGINAL PURCHASER)

SAMPLE

Fill in the information requested above.
This will be useful anytime you need to order parts.

This is only a SAMPLE of the Limited New Product Warranty provided with each new machine to the original owner.

Copyright © 2006 Terramite Corporation

Courtesy of Machine.Market

Since 1965

terramite®

CONSTRUCTION EQUIPMENT

"Backed by a World of Experience"

"Backed by a World of Experience"

600 Goff Mountain Road ♦ P.O. Box 7146, Charleston, WV 25356-7146 U.S.A.
1-800-428-3772 ♦ Fax 1-800-776-4845
International 1-304-776-4231 ♦ Fax 1-304-776-4845
http:\\www.terramite.com

Courtesy of Machine.Market